ORDINANCE NO. ___19604-03-2011_____

AN ORDINANCE AMENDING THE FORT WORTH PLUMBING CODE, BY ADOPTING THE 2009 INTERNATIONAL PLUMBING CODE AND THE 2009 INTERNATIONAL FUEL GAS CODE, WITH LOCAL AMENDMENTS; AMENDING SECTIONS 26-1, 26-2, 26-3 AND 26-4 OF THE CODE OF THE CITY OF FORT WORTH (1986); REGULATING THE ERECTION, CONSTRUCTION, ENLARGEMENT, ALTERATION, REPAIR, MOVING, REMOVAL, DEMOLITION, CONVERSION, EQUIPMENT, USE AND MAINTENANCE OF PLUMBING, DRAINAGE AND FUEL GAS SYSTEMS FOR BUILDINGS AND STRUCTURES IN THE CITY OF FORT WORTH, AND PLUMBING AND DRAINAGE SYSTEMS OUTSIDE THIS JURISDICTION IF THE SAME ARE CONNECTED TO THE CITY WATER OR SEWAGE SYSTEMS; DEFINING CERTAIN TERMS; ESTABLISHING MINIMUM REQUIREMENTS FOR THE INSTALLATION, ALTERATION OR REPAIR OF PLUMBING, DRAINAGE AND FUEL GAS SYSTEMS; PROVIDING FOR THE ISSUANCE OF PERMITS AND THE COLLECTION OF FEES THEREOF; PROVIDING FOR THE INSPECTION OF PLUMBING, DRAINAGE AND FUEL GAS SYSTEMS; PROVIDING FOR A SEVERABILITY CLAUSE; PROVIDING FOR A SAVINGS CLAUSE; PROVIDING FOR A PENALTY CLAUSE; PROVIDING THAT THIS ORDINANCE SHALL BE CUMULATIVE; PROVIDING FOR PUBLICATION IN PAMPHLET FORM; PROVIDING FOR PUBLICATION IN THE OFFICIAL NEWSPAPER; AND PROVIDING AN EFFECTIVE DATE.

NOW, THEREFORE, BE IT ORDAINED BY THE CITY COUNCIL OF THE CITY OF FORT WORTH, TEXAS:

SECTION 1.

That Section 26-1 of the Code of the City of Fort Worth (1986) is hereby amended to read as follows:

Sec. 26-1. THE 2009 EDITION OF THE INTERNATIONAL PLUMBING CODE AND THE 2009 EDITION OF THE INTERNATIONAL FUEL GAS CODE ADOPTED.

(a) The Plumbing Code of the City of Fort Worth is hereby revised and amended to conform, with certain exceptions as specified below, to the 2009 International Plumbing Code and the 2009 International Fuel Gas Code of the International Code Council (ICC), and the same as amended are hereby adopted as the City's Plumbing Code. One (1) copy of the 2009 International Plumbing Code, marked as Exhibit "A", and One (1) copy of the 2009 edition of the International Fuel Gas Code, marked Exhibit "B", is incorporated herein by reference and shall be filed in the Office of the City

Secretary for permanent record and inspection.

(b) The following provisions of the Appendix to the 2009 International Plumbing Code are hereby specifically adopted as amended as part of the Plumbing Code of the City of Fort Worth:

Appendix Chapter E, Sizing of Water Piping Systems
Appendix Chapter F, Structural Safety
Appendix Chapter H, Water Recovery (local amendment)

(c) The plumbing and fuel gas provisions of the *International Residential Code*, as adopted elsewhere, shall be used as the plumbing and fuel gas provisions for buildings and structures applicable to that code except as provided for in that code.

(d) Any Errata corrections published by the International Code Council for the 2009 International Plumbing Code or the 2009 International Fuel Gas Code, as they are discovered, are considered as part of this code.

SECTION 2.

That Section 26-2 of the Code of the City of Fort Worth (1986) is hereby amended to read as follows:

Sec. 26-2. Amendments.

(a) Chapter 1 "SCOPE AND ADMINISTRATION" of the 2009 International Plumbing Code and of the 2009 International Fuel Gas Code are hereby deleted and replaced with the following:

PART 1 – SCOPE AND APPLICATION

SECTION 101
GENERAL

101.1 Title. These regulations shall be known as the Plumbing Code of the City of Fort Worth ~~*International Plumbing Code* of [NAME OF JURISDICTION]~~ hereinafter referred to as "this code." The term "Plumbing Code" and "this code" applies to both the *International Plumbing Code* and the *International Fuel Gas Code* as one combined code.

All references to "plumbing" and "plumbing systems" in this code shall also include other plumbing systems, including fuel gas systems, as may be covered in other codes, as required to comply with the definition and provisions of "plumbing" and "plumbing systems" as specified in the State of Texas Plumbing Licensing Law.

101.2 Scope.

(a) The provisions of this code shall:

1. apply to the erection, installation, alteration, repair, relocation, replacement, addition to, use or maintenance of plumbing systems within this jurisdiction, and outside this jurisdiction if the same are connected to the city water or sewage systems.

2. regulate nonflammable medical gas, inhalation anesthetic, vacuum piping, nonmedical oxygen systems and sanitary and condensate vacuum collection systems.

3. apply to the installation of fuel-gas piping systems, fuel gas appliances, gaseous hydrogen systems and related accessories.

4. Gaseous hydrogen systems shall be regulated by Chapter 7 of the International Fuel Gas Code.

5. Coverage of fuel gas piping systems shall extend from the *point of delivery* to the outlet of the *appliance* shutoff valves. *Piping* system requirements shall include design, materials, components, fabrication, assembly, installation, testing, inspection, operation and maintenance.

6. Requirements for gas appliances and related accessories shall include installation, combustion and ventilation air and venting and connections to *piping* systems.

Exception: Detached one- and two-family dwellings and multiple single-family dwellings (townhouses) not more than three stories high with separate mans of egress and their accessory structures shall comply with the *International Residential Code*, except as provided for in that code. For application of this code to such uses under the Residential Code, they shall be considered to be Group R-3 residential uses with Group U accessory uses, unless a more appropriate occupancy group is assigned by the building official.

The provisions of this code shall also apply to usage of the surrounding site and access to and from the building, structure or site, as necessary to achieve the purpose of this code, and to obtain compliance with other codes and ordinances of this jurisdiction.

101.2.1 Appendices. Provisions in the appendices shall not apply unless specifically adopted. The following appendixes of the *International Plumbing Code* are specifically adopted:

Appendix Chapter E, Sizing of Water Piping Systems
Appendix Chapter F, Structural Safety

Appendix Chapter H, Water Recovery (local amendment)

(b) This code is not intended to apply to that work done by the proper employees of the City or other companies furnishing water in the laying of water mains and services and city sewer mains and services that are considered as public utilities, nor to the installation of gas distributing mains and services in the streets, alleys and easements by employees of the gas distributing company.

101.3 Intent. The purpose of this code is to provide minimum standards to safeguard life or limb, health, property and public welfare by regulating and controlling the design, construction, installation, quality of materials, location, operation, and maintenance or use of plumbing equipment and systems and to provide safety to fire fighters and emergency responders during emergency operations.

101.4 Severability. If any section, subsection, sentence, clause or phrase of this code is for any reason held to be unconstitutional, such decision shall not affect the validity of the remaining portions of this code.

SECTION 102
APPLICABILITY

102.1 General. Where there is a conflict between a general requirement and a specific requirement, the specific requirement shall govern. Where, in any specific case, different sections of this code specify different materials, methods of construction or other requirements, the most restrictive shall govern.

102.2 Existing installations. Except as otherwise provided for in this chapter, plumbing systems lawfully in existence at the time of the adoption of this code shall be permitted to have their use and maintenance continued if the use, maintenance or repair is in accordance with the original design and no hazard to life, health or property is created by such plumbing system

Exception: Existing unvented room heaters in dwelling units shall comply with Section 621.2 of the *International Fuel Gas Code*.

102.6.1 Annexation. Upon annexation, all existing structures and buildings are subject to inspection for compliance with the provisions of this section, Section 108.7 of this code for unsafe installations, Chapter 34 of the Building Code, the Minimum Building Standards Code and the Fire Code, except as specifically deleted by such annexation ordinance.

102.3 Maintenance. All plumbing systems, materials and appurtenances, both existing and new, and all parts thereof, shall be maintained in proper operating condition in accordance with the original design in a safe and sanitary condition. All devices or

safeguards required by this code shall be maintained in compliance with the code edition under which they were installed.

The owner or the owner's designated agent shall be responsible for maintenance of plumbing systems. To determine compliance with this provision, the code official shall have the authority to require any plumbing system to be reinspected.

102.4 Additions, alterations or repairs. Additions, alterations, renovations or repairs to any plumbing system shall conform to that required for a new plumbing system without requiring the existing plumbing system to comply with all the requirements of this code. Additions, alterations or repairs shall not cause an existing system to become unsafe, insanitary or overloaded.

Minor additions, alterations, renovations and repairs to existing plumbing systems shall meet the provisions for new construction, unless such work is done in the same manner and arrangement as was in the existing system, is not hazardous and is *approved*.

102.5 Change in occupancy. It shall be unlawful to make any change in the *occupancy* of any structure that will subject the structure to any special provision of this code applicable to the new *occupancy* without approval of the code official. The code official shall certify that such structure meets the intent of the provisions of law governing building construction for the proposed new *occupancy* and that such change of *occupancy* does not result in any hazard to the public health, safety or welfare.

No change shall be made in the use or occupancy of any building that would place the building in a different division of the same group of occupancies or in a different group of occupancies, unless such building is made to comply with the requirements of this code for such division or group of occupancy. Subject to the approval of the code official, the use or occupancy of existing buildings shall be permitted to be changed and the building is allowed to be occupied for purposes in other groups without conforming to all the requirements of this code for those groups, provided the new or proposed use is less hazardous, based on life and fire risk, than the existing use.

Whenever the change of occupancy involves a change in the character or level of activity, without a change in the Group or Division within the same Group, only the applicable provisions that apply to the new character or level of activity shall be required.

An example of a change of character would be a change from an office, Group B, to a medical office, Group B, or to an Ambulatory Health Care facility, Group B. While each has the same basic requirements, height, area, means of egress, etc. they also have different specific requirements; e.g. handicap limitations, smoke partitions, fire area, sprinklers, etc.

An example of a change in the level of activity would be obtaining an increase in the occupant load of a building or space, such as a bar, that might now exceed the limits requiring a fire sprinkler or alarm system, or if already exceeding the limits, would

102.6 Historic buildings. The provisions of this code relating to the construction, alteration, repair, enlargement, restoration, relocation or moving of buildings or structures shall not be mandatory for existing buildings or structures identified and classified by the state or local jurisdiction as historic buildings when such buildings or structures are judged by the code official to be safe and in the public interest of health, safety and welfare regarding any proposed construction, alteration, repair, enlargement, restoration, relocation or moving of buildings.

Exception: Buildings undergoing a change of occupancy.

102.7 Moved buildings. ~~Except as determined by Section 101.2,~~ Plumbing systems that are part of buildings or structures moved into or within the jurisdiction shall comply with the provisions of this code for new installations.

102.8 Referenced codes and standards. The codes and standards referenced in this code shall be those that are listed in Chapter 13 of the *International Plumbing Code* and Chapter 8 of the *International Fuel Gas Code* and such codes, when specifically adopted, and standards shall be considered as part of the requirements of this code to the prescribed extent of each such reference. Where differences occur between provisions of this code and the referenced standards, the provisions of this code shall be the minimum requirements. Whenever amendments have been adopted to the referenced codes and standards, each reference to said code and standard shall be considered to reference the amendments as well. Any reference to NFPA 70 or the ICC *Electrical Code* shall mean the Electrical Code as adopted.

102.8.1 Rehabilitation Code. Chapter 34 of the Building Code shall be considered as the Fort Worth Rehab Code. Any code amendment designed to provide assistance in the rehabilitation of buildings shall be designated as **(RH)**.

102.9 Requirements not covered by code. Any requirements necessary for the strength, stability or proper operation of an existing or proposed plumbing system, or for the public safety, health and general welfare, not specifically covered by this code, shall be determined by the code official.

102.10 Other Laws. The provisions of this code shall not be deemed to nullify any provisions of local, state or federal law.

102.10.1 State Law. Amendments based on State Law may be placed in this ordinance as a tool for information and enforcement purposes and will be identified with its corresponding State Law house bill or senate bill number (**SL – HB # or SB #**). Unless State Law allows, local variances to such provisions are not permitted.

102.10.2 Elevator Code. While the Elevator Code is an adopted standard in the building code, amendments based on extracts from the ASME A17.1 Elevator Code

and will be identified with (**ASME A17.1 – ????????**). Final interpretation and appeals shall fall under the authority of Texas Department of License and Regulation.)

102.11 Application of references. Reference to chapter section numbers, or to provisions not specifically identified by number, shall be construed to refer to such chapter, section or provisions of this code.

102.12 Minimum Building Standards Code. As provided for in Section 7-67, and as further detailed in Sections 7-87, 7-88, 7-89, 7-90 and 7-91 of the City Code, which is more specifically known as the Minimum Building Standards Code, those provisions setting minimum standards that relate to Plumbing Code items for buildings and structures shall be considered as part of this code.

Enforcement of these sections may be performed by other departments or divisions of the City of Fort Worth. However, as provisions of this code, final interpretation, appeals of interpretation, requests for variances, etc. shall be handled as described in this code.

102.13 Manufactured Home Parks and Recreational Vehicle Parks.

102.13.1 Specific provisions for Manufactured Home Parks and Recreational Vehicle Parks are provided in this code. Any compliance method not specified shall be installed in accordance with the provisions of this code.

102.13.2 History. Mobile Home Park regulations were first adopted in May 18, 1970 (with retroactive provisions), Ordinance 6293. Recreational Vehicle Park regulations were first adopted by Ordinance 6372, effective October 12, 1970. Under Ordinance 12264, City Code Chapter 21, Mobile Home Parks was deleted and the provisions moved to the Fire Code Appendix. Such Appendix was continued through Ordinances 14652, 14688 and 16027. The provisions were relocated here under ordinance 18338-10-2008.

PART 2 – ADMINISTRATION AND ENFORCEMENT

SECTION 103
DEPARTMENT OF ~~PLUMBING INSPECTION~~ PLANNING AND DEVELOPMENT

103.1 General. The department of Planning and Development ~~plumbing inspection~~ is hereby created as specified in the City Code and shall be referred to as "the department." ~~and the executive official in charge thereof shall be known as the code official.~~ Any reference to the "department of plumbing inspection" or "department of inspection" shall mean the Department of Planning and Development.

Primary enforcement of the provisions of this code shall rest with the Department of Planning and Development as specified under the duties and powers of the building official.

The provisions of this code may be enforced by other code enforcement divisions of this city but interpretation authority shall be retained by the building official.

103.2 Appointment. The code official shall be appointed as specified in the City Code ~~by the chief appointing authority of the jurisdiction~~.

103.3 Deputies. In accordance with the prescribed procedures of this jurisdiction and with the concurrence of the appointing authority, the code official shall have the authority to appoint a deputy code official, other related technical officers, inspectors and other employees. Such employees shall have powers as delegated by the code official. For the purpose of this code, the regularly authorized deputy code official shall be the Chief Plumbing Inspector.

103.3.1 Restriction of employees. An official or employee connected with the plumbing inspection enforcement of this code shall not be engaged in or directly or indirectly connected with the furnishing of labor, materials or appliances for the construction, alteration or maintenance of a building; and such officer or employee shall not engage in any work that conflicts with official duties or with the interests of the department.

Further no official or employee shall be permitted to work for, or be connected with, any master plumber, plumbing manufacturer or wholesale plumbing and supply company, or do any plumbing work while employed as a plumbing inspector by the city.

103.4 Liability. The code official, member of the board of appeals or employee charged with the enforcement of this code, while acting for the jurisdiction in good faith and without malice in the discharge of the duties required by this code or other pertinent law or ordinance, shall not thereby be rendered liable personally and is hereby relieved

from all personal liability for any damage accruing to persons or property as a result of any act or by reason of an act or omission in the discharge of official duties.

Any suit instituted against any officer or employee because of an act performed by that officer or employee in the lawful discharge of duties and under the provisions of this code shall be defended by the legal representative of the jurisdiction until the final termination of the proceedings. The code official or any subordinate shall not be liable for cost in any action, suit or proceeding that is instituted in pursuance of the provisions of this code. Any judgment resulting therefrom shall be assumed by this jurisdiction.

103.4.1 The liability exemption and defense protection provided in this section are not extended to Third Party Companies, or their employees, agents or assignees.

103.4.2 This code shall not be construed to relieve from or lessen the responsibility of any person owning, operating or controlling any building or structure for any damages to persons or property caused by defects, nor shall the code enforcement agency or its parent jurisdiction be held as assuming any such liability by reason of the inspections authorized by this code or any permits or certificates issued under this code.

SECTION 104
DUTIES AND POWERS OF THE CODE OFFICIAL

104.1 General. The code official is hereby authorized and directed to enforce the provisions of this code. The code official shall have the authority to render interpretations of this code and to adopt policies and procedures in order to clarify the application of its provisions. Such interpretations, policies and procedures shall be in compliance with the intent and purpose of this code. Such policies and procedures shall not have the effect of waiving requirements specifically provided for in this code.

104.1.1 Other interpretations. Any provision or local amendment marked in this code as [F] shall be under the primary interpretation authority of the Fire Chief. Any provisions marked in the Fire Code or local amendment as [B], [E], [EB], [FG], [M] or [P] shall be under the primary interpretation authority of the *building official*.

104.2 Applications and permits. The code official shall receive applications, review construction documents and issue permits for the installation and alteration of plumbing systems, inspect the premises for which such permits have been issued, and enforce compliance with the provisions of this code.

104.3 Inspections. The code official shall make all the required inspections, or shall accept reports of inspection by *approved* agencies or individuals. All reports of such inspections shall be in writing and be certified by a responsible officer of such *approved* agency or by the responsible individual. The code official is authorized to engage such expert opinion as deemed necessary to report on unusual technical issues that arise,

subject to the approval of the appointing authority.

104.4 Right of entry. Where it is necessary to make an inspection to enforce the provisions of this code, or whenever the code official has reasonable cause to believe that there exists in any building or upon any premises any conditions or violations of this code that make the building or premises unsafe, insanitary, dangerous or hazardous, the code official or designee shall have the authority to enter the building or premises at all reasonable times to inspect or to perform the duties imposed upon the code official by this code. If such building or premises is occupied, the code official shall present credentials to the occupant and request entry. If such building or premises is unoccupied, the code official shall first make a reasonable effort to locate the owner or other person having charge or control of the building or premises and request entry. If entry is refused, the code official shall have recourse to every remedy provided by law to secure entry.

An application for a permit shall be considered as permission from an authorized representative to inspect the premises.

When the code official shall have first obtained a proper inspection warrant or other remedy provided by law to secure entry, no owner, occupant, or person having charge, care or control of any building or premises shall fail or neglect, after proper request is made as herein provided, to promptly permit entry therein by the code official for the purpose of inspection and examination pursuant to this code.

It shall be unlawful for any person to hinder or interfere with the code official, deputy or any of the inspectors in the discharge of their duties under this code.

104.5 Identification. The code official shall carry proper identification when inspecting structures or premises in the performance of duties under this code.

104.6 Notices and orders. The code official shall issue all necessary notices or orders to ensure compliance with this code.

104.7 Department records. The ~~code official~~ department shall keep official records of applications received, permits and certificates issued, fees collected, reports of inspections, and notices and orders issued. Such records shall be retained in the official records for the period required for the retention of public records.

104.8 Cooperation of other officials and officers. The code official may request, and shall receive, the assistance and cooperation of other officials of this jurisdiction so far as is required in the discharge of the duties required by this code or other pertinent law or ordinance.

SECTION 105
APPROVAL

105.1 Modifications. Wherever there are practical difficulties involved in carrying out the provisions of this code, the code official shall have the authority to grant modifications for individual cases, upon application of the owner or owner's representative, provided the code official shall first find that special individual reason makes the strict letter of this code impractical and the modification conforms to the intent and purpose of this code and that such modification does not lessen health, life and fire safety requirements. The details of any action granting modifications shall be recorded and entered in the files of the ~~plumbing inspection~~ department.

105.2 Alternate materials, methods and equipment. The provisions of this code are not intended to prevent the installation of any material or to prohibit any method of construction not specifically prescribed by this code, provided that any such alternative has been *approved* by the code official. An alternative material or method of construction shall be *approved* where the code official finds that the proposed alternative material, method or equipment complies with the intent of the provisions of this code and is at least the equivalent of that prescribed in this code in quality, strength, effectiveness, fire resistance, durability and safety.

105.2.1 Research reports. Supporting data, where necessary to assist in the approval of materials or assemblies not specifically provided for in this code, shall consist of valid research reports from *approved* sources.

105.3 Required testing. Whenever there is insufficient evidence of compliance with the provisions of this code, or evidence that a material or method does not conform to the requirements of this code, or in order to substantiate claims for alternate materials or methods, the code official shall have the authority to require tests as evidence of compliance to be made at no expense to the jurisdiction.

105.3.1 Test methods. Test methods shall be as specified in this code or by other recognized test standards. In the absence of recognized and accepted test methods, the code official shall approve the testing procedures.

105.3.2 Testing agency. All tests shall be performed by an *approved* agency.

105.3.3 Test reports. Reports of tests shall be retained by the code official for the period required for retention of public records.

105.4 Alternative engineered design. The design, documentation, inspection, testing and approval of an *alternative engineered design* plumbing system shall comply with Sections 105.4.1 through 105.4.6.

105.4.1 Design criteria. An *alternative engineered design* shall conform to the intent of the provisions of this code and shall provide an equivalent level of quality, strength, effectiveness, fire resistance, durability and safety. Material, equipment or components shall be designed and installed in accordance with the manufacturer's

installation instructions.

105.4.2 Submittal. The registered design professional shall indicate on the permit application that the plumbing system is an *alternative engineered design*. The permit and permanent permit records shall indicate that an *alternative engineered design* was part of the *approved* installation.

105.4.3 Technical data. The registered design professional shall submit sufficient technical data to substantiate the proposed *alternative engineered design* and to prove that the performance meets the intent of this code.

105.4.4 Construction documents. The registered design professional shall submit to the code official two complete sets of signed and sealed construction documents for the *alternative engineered design*. The construction documents shall include floor plans and a riser diagram of the work. Where appropriate, the construction documents shall indicate the direction of flow, all pipe sizes, grade of horizontal piping, loading, and location of fixtures and appliances.

105.4.5 Design approval. Where the code official determines that the *alternative engineered design* conforms to the intent of this code, the plumbing system shall be *approved*. If the *alternative engineered design* is not *approved*, the code official shall notify the registered design professional in writing, stating the reasons thereof.

105.4.6 Inspection and testing. The *alternative engineered design* shall be tested and inspected in accordance with the requirements of Sections 107 and 312.

105.5 Approved materials and equipment. Materials, equipment and devices *approved* by the code official shall be constructed and installed in accordance with such approval.

105.5.1 Material and equipment reuse. Materials, equipment and devices shall not be reused unless such elements have been reconditioned, tested, placed in good and proper working condition, and *approved*.

SECTION 106
PERMITS

106.1 When required. Any owner, authorized agent, individual or contractor who desires to construct, enlarge, alter, repair, move, demolish or change the *occupancy* of a building or structure, or to erect, install, enlarge, alter, repair, remove, convert or replace any plumbing system, the installation of which is regulated by this code, or to cause any such work to be done, shall first make application to the code official and obtain the required permit for the work.

A separate permit shall be obtained for each building or structure unless otherwise

106.2 Exempt work. The following work shall be exempt from the requirement for a permit:

1. The stopping of leaks in drains, water, soil, waste or vent pipe, provided, however, that if any concealed trap, drainpipe, water, soil, waste or vent pipe becomes defective and it becomes necessary to remove and replace the same with new material, such work shall be considered as new work and a permit shall be obtained and inspection made as provided in this code.

2. The clearing of stoppages in drains, soil, waste and vent piping or the repairing of leaks in pipes, valves or fixtures, ~~and the~~.

3. Removal and reinstallation of exposed traps; replacement of valves, nipples to sinks and lavatories; replacement of plumbing fixtures, water closets, garbage disposals, dishwashers, clothes washers and similar appliances, provided that in all cases such repairs do not involve or require the replacement or rearrangement of valves, pipes or fixtures.

Exception: Replacement of water heaters, shower pans and bathtubs shall require a permit.

4. In a manufactured home or recreational vehicle park, when the interceptor traps or house trailer site traps are installed at the same time as a building sewer on any lot, no sewer permit shall be required for the connection of any such trap to an appropriate inlet fitting provided in the building sewer by the permittee constructing such sewer.

5. Any portable fuel gas heating, cooking or clothes drying *appliance*.

6. Replacement of any minor component of a fuel gas *appliance* or *equipment* that does not alter approval of such *appliance* or *equipment* or make such *appliance* or *equipment* unsafe.

Exemption from the permit requirements of this code shall not be deemed to grant authorization for any work to be done in violation of the provisions of this code or any other laws or ordinances of this jurisdiction.

No person shall do plumbing or fuel gas work, with or without a permit, in violation of the State of Texas Plumbing License Law.

106.3 Application for permit. Each application for a permit, with the required fee, shall be filed with the code official on a form furnished for that purpose and shall contain a general description of the proposed work and its location. ~~The application shall be signed by the owner or an authorized agent.~~ The permit application shall ~~indicate the proposed *occupancy* of all parts of the building and of that portion of the side or lot, if~~

_____ contain such other information required by the code official.

106.3.1 Construction documents. Construction documents, engineering calculations, diagrams and other such data shall be submitted in two or more sets with each application for a permit. The code official shall require construction documents, computations and specifications to be prepared and designed by a registered design professional when required by state law. Construction documents shall be drawn to scale and shall be of sufficient clarity to indicate the location, nature and extent of the work proposed and show in detail that the work conforms to the provisions of this code and all relevant laws, ordinances, rules and regulations. Construction documents for buildings more than two stories in height shall indicate where penetrations will be made for pipes, fittings and components and shall indicate the materials and methods for maintaining required structural safety, fire-resistance rating and fireblocking.

Exception: The code official shall have the authority to waive the submission of construction documents, calculations or other data if the nature of the work applied for is such that reviewing of construction documents is not necessary to determine compliance with this code.

The code official may require plans, computations and specifications to be prepared and designed by an engineer or architect licensed by the Sate of Texas to practice as such even if not required by state law.

106.3.2 Preliminary inspection. Before a permit is issued, the code official is authorized to inspect and evaluate the systems, equipment, buildings, devices, premises and spaces or areas to be used.

106.3.3 ~~Time limitation of application.~~

Expiration of plan review. Applications for which no permit is issued within 180 days following the date of application shall expire by limitation, and construction documents and other data submitted for review may thereafter be returned to the applicant or destroyed by the code official.

If the applicant submits a request for extension before the expiration date, showing that circumstances beyond the control of the applicant have prevented action from being taken, the code official may extend the time for a period not exceeding 180 days. No application shall be extended more than once.

If the applicant submits a request for extension after but within 90 days of the expiration date, the applicant shall resubmit plans and pay a new plan review fee. The application shall be subject to any new adopted laws, ordinances and regulations that became effective since the original application date.

106.4 By whom application is made. Application for a permit shall be made by the person or agent to install all or part of any plumbing system. The applicant shall meet all qualifications established by statute, or by rules promulgated by this code, or by ordinance or by resolution. The full name and address of the applicant shall be stated in the application. Permits shall only be issued to those individuals authorized under Section 106.7.

106.5 Permit issuance. The application, construction documents and other data filed by an applicant for a permit shall be reviewed by the code official. Such plans may be reviewed by other departments of this jurisdiction to verity compliance with any applicable laws under their jurisdiction. If the code official finds that the proposed work conforms to the requirements of this code and all laws and ordinances applicable thereto, and that the fees specified in Section 106.6 and all fees for water tap and sewer service have been paid, a permit shall be issued to the applicant.

Exception: When plan review is performed by a Third Party Organization as specified in Section 111, the code official, at his discretion, may only review what he deems necessary to insure a quality control of the review already performed.

106.5.1 Approved construction documents. When the code official issues the permit where construction documents are required, the construction documents shall be endorsed in writing and stamped "APPROVED." Such *approved* construction documents shall not be changed, modified or altered without authorization from the code official. All work shall be done in accordance with the *approved* construction documents.

106.5.2 Phased approval. The code official shall have the authority to issue a permit for the construction of a part of a plumbing system before the entire construction documents for the whole system have been submitted or *approved*, provided adequate information and detailed statements have been filed complying with all pertinent requirements of this code. The holders of such permit shall proceed at their own risk without assurance that the permit for the entire plumbing system will be granted.

106.5.2 Validity. The issuance or granting of a permit or approval of construction documents shall not be construed to be a permit for, or an approval of, any violation of the provisions of this code or of any other ordinance of the jurisdiction. No permit presuming to give authority to violate or cancel the provisions of this code shall be valid.

The issuance of a permit based on construction documents and other data shall not prevent the code official from thereafter requiring the correction of errors in said construction documents and other data or from preventing building operations being carried on thereunder when in violation of this code or of other ordinances of this jurisdiction.

106.5.3 Expiration. Every permit issued by the code official under the provisions of this code shall expire by limitation and become null and void if the work authorized by such permit is not commenced within 180 days from the date of such permit, or if the work authorized by such permit is suspended or abandoned at any time after the work is commenced for a period of 180 days.

When work has commenced but has been suspended or abandoned for more than 180 days, before such work can be recommenced, a new permit shall be first obtained and the fee therefore shall be one-half the amount required for a new permit for such work, provided no changes have been made or will be made in the original construction documents for such work, and provided further that such suspension or abandonment has not exceeded one year.

106.5.4 Extensions. When work has not commenced, any permittee holding an unexpired permit shall have the right to apply for an extension of the time within which the permittee will commence work under that permit when work is unable to be commenced within the time required by this section for good and satisfactory reasons. The code official ~~shall~~ may extend the time for action by the permittee for a period not exceeding 180 days if there is reasonable cause. No permit shall be extended more than once. ~~The fee for an extension shall be one-half the amount required for a new permit for such work.~~

In order to renew action on a permit after expiration, the permittee shall pay a new full permit fee and comply with all codes and ordinances applicable at that time.

106.5.5 Suspension or revocation of permit. The code official shall have the authority to suspend or revoke a permit issued under the provisions of this code wherever the permit is issued in error or on the basis of incorrect, inaccurate or incomplete information, or in violation of any ordinance or regulation or any of the provisions of this code.

106.5.6 Retention of construction documents. One set of *approved* construction documents shall be retained by the code official for a period of not less than 90 ~~180~~ days from date of completion of the permitted work, or as required by state or local laws.

One set of *approved* construction documents shall be returned to the applicant, and said set shall be kept on the site of the building or work at all times during which the work authorized thereby is in progress.

106.5.7 Previous approvals. This code shall not require changes in the construction documents, construction or designated *occupancy* of a structure for which a lawful permit has been heretofore issued or otherwise lawfully authorized, and the construction of which has been pursued in good faith within 180 days after the effective date of this code and has not been abandoned.

106.5.8 Posting of ~~permit~~ inspection record card. When an inspection record card

_____ ~~The permit or a copy~~ shall be kept on the site of the work, and maintained accessible for inspectors until the completion of the project.

106.6 Fees. A permit shall not be issued until the fees prescribed in Section 106.6.2 have been paid, and an amendment to a permit shall not be released until the additional fee, if any, ~~due to an increase of the plumbing systems,~~ has been paid.

106.6.1 ~~Work commencing before permit issuance.~~

Investigation fees: Work without a permit.

106.6.1.1 Investigation. Whenever any work for which a permit is required by this code has been commenced without first obtaining said permit, a special investigation shall be made before a permit may be issued for such work.

Exceptions: 1. This provision shall not apply to emergency work when it shall be proved to the satisfaction of the code official that such work was urgently necessary and that it was not practical to obtain a permit therefore before the commencement of the work. In all cases, a permit must be obtained as soon as it is practical to do so, and if there be an unreasonable delay in obtaining such permit, an investigation fee as herein provided shall be charged.

2. The investigation fee required shall be charged for work for which an inspection has been requested and no permit has been obtained.

106.6.1.2 Fee. An investigation fee, in addition to the permit fee, shall be collected whether or not a permit is then or subsequently issued. The investigation fee shall be equal to the amount of the permit fee required by this code. The minimum investigation fee shall be the same as the application fee set forth in Table 106.6.2(1). The payment of such investigation fee shall not exempt any person from compliance with all other provisions of this code nor from any penalty prescribed by law.

Use of the third party plan review or inspection option, will not reduce or lower the investigation fee required by this section.

The applicant may appeal the amount of an investigation fee to the city council by filing a written appeal showing the reason why the fee should be lowered. The city council may, upon a finding that the investigation fee is unreasonable based upon the facts presented, reduce the investigation fee, but in no case may the fee be reduced to less than the actual investigation costs incurred by the city.

106.6.2 Fee schedule. The fees for all plumbing work shall be as indicated in ~~the following schedule~~ Table 106.6.2(1):

Any person obtaining a permit application required by this code shall, at the time of

the installation, relocation or replacement of any of the listed items.

Exceptions: 1. Where the fees for new structures and additions to structures have been collected on a building permit, the permit fee is not required but the permit application shall be filed by the person doing the work before work is commenced.

However, an additional 10% deposit of the building permit fee for new construction and additions with plumbing work shall be required to cover third party plumbing inspections. For new one- and two-family dwellings inspected by third party, a flat deposit of eighty dollars ($80.00) shall be collected. Such deposit shall be used to pay, through a billing process established by the department, for the plumbing inspection services performed.

2. Where these fees are being invoiced monthly and the account is past due, a penalty and/or interest charge as prescribed by the jurisdiction, shall be assessed. The above assessed fee and delinquent payment shall be paid before additional permits will be issued or additional inspections performed.

3. Buildings or structures owned and occupied by a Federal, State, or County entity on property owned by the Federal, State, or County entity shall be exempt from the permit fees. This exception does not apply to public school districts or county community colleges.

4. Work by non-City personnel on property under the control of the City of Fort Worth shall be exempt from the permit fees only if the work is for action under a contract approved by City Council with notes in the contract packages stating the fee is waived.

5. Work by City personnel on property under the control of the City of Fort Worth shall be exempt from the permit fees only if the application is accompanied by a copy of the work order for the project.

6. When the project is to be inspected by an approved third party organization as described in Section 111, the permit fee shall be reduced by multiplying the sum by 35% (0.35). The resulting amount will be calculated to the penny with no rounding for the tenth of a penny figure.

However, the 65% remaining amount shall be collected as a deposit to cover third party plumbing inspections. Such deposit shall be used to pay, through a billing process established by the department, for the plumbing inspection services performed.

Exemption or reduction of the permit fees under this section shall not waive the requirements to pay a full investigation fee for doing work without a permit as required under Section 106.6.1.

106.6.3 Fee Refunds. The code official may ~~shall~~ authorize the refunding of fees as follows:

1. The full amount of any fee paid hereunder that was erroneously paid or collected.
2. When a request is made within 60 days from permit cancellation, not more than 100 percent, minus an administration charge as listed in Table 106.6.2(1), of the permit fee paid when no work has been done under a permit issued in accordance with this code.

After the 60-day time limit, no fee shall be returned.

3. (delete)

Exceptions: 1. When the investigation fee of Section 106.6.1 has been collected, it shall not be refunded unless paid by another party.

2. No refund will be given for the application fee.

The code official shall not authorize the refunding of any fee paid except upon written application filed by the original permittee not later than 60 ~~180~~ days after the date of permit issuance ~~fee payment~~.

Table 106.6.2(1)
Schedule of Fees [1]

Administrative

1. CFPBOA Application Fee	
(1st item per address)	$125.00
(Each additional item per address)	30.00
2. Permit Application Fee	22.00
3. Record Change Fee (per record or permit) . . .	22.00
4. Refund Administrative Charge	5.00

Permit items[2]

First Fixture or Appliance	7.82
Additional Fixtures or Appliances (each)	3.20
Sewer - First 120 feet	7.82
Each additional 100 feet or portion thereof . . .	7.45
Gas Service	7.82
Each Lawn Sprinkler System	31.31
Water Service – First 120 feet	7.82
Each additional 100 feet or portion thereof . . .	7.45
Water Submeter	3.20
Grease Trap or Interceptor	7.82
Sand Trap	14.93
Each Roof Drain	7.45
Temporary Gas Service	7.82
Backflow Preventer	7.82
Floor Drain	3.20
Mobile Homes or Mobile Units	
Each mobile home space or mobile unit space . . .	28.46
Each sewer vent	17.07
Manhole	24.90
Test Well	7.82
Medical gasses and vacuum system	33.00

[1]For the purpose of this table, a sanitary plumbing outlet on or to which a plumbing fixture or appliance may be set or attached, or any plumbing fixture or appliance to which a water connection may be made, shall be construed to be a fixture. Fees for reconnection and retesting of existing plumbing systems in relocated buildings shall be based on the number of plumbing fixtures, gas systems, water heaters, etc., involved.

[2]When inspections are performed by third party, the permit fee shall be reduced by multiplying the sum by 35% (0.35). The resulting amount will be calculated to the penny with no rounding for the tenth of a penny figure.

Other Inspections and Fees

1. Inspections outside of normal business hours (minimum of two hours) $38.00 per hour
2. Reinspection fee assessed under provisions of C06.6 . . . $27.50
3. Inspections for which no fee is specifically indicated (minimum charge - one-half hour) . . . . . $38.00 per hour
4. Additional plan review required by changes, additions or revisions to plans (minimum charge - one-half hour) . . . $38.00 per hour
5. Inspections outside of city limits (commercial) . . . $49.50[1] per inspector
   (residential) . . . $66.00[1] total

[1] Or $33.00 per hour, whichever is greater.

Table 106.6.2(2)
Business Registration[1]

First year or portion thereof [2]	$120.00
Yearly renewal	$ 60.00
Late fee	$ 30.00

1. Registration fee is not required when prohibited by State Law. See "The Plumbing License Law", Section 1301.551 (g). (**SL – SB 1354-2009**)
2. Annual fee is due in full on the first day of January each year. Fees will not be pro rated for registration taken out during the year. (Renewal dates may be adjusted by the code official to equally distribute the workload throughout the year.)

106.6.4 Change of Record. Any request for a record change, or any mistake made by an applicant that requires a record change, including but not limited to name or address changes, whether computer or paper record, must be requested in writing by the original applicant with a fee as specified in Table 106.6.2(1).

Exceptions: 1. For record changes that affect the permit fee, such as adding equipment, fixtures or square footage, the code official may require a separate permit for the extra items with the appropriate fees.

2. The fee will not be required for those applicants meeting exception 5 of Section 106.6.2.

106.7 Whom permits may be issued to. No permit shall be issued to any person to do or cause to be done any work regulated by this code, except to a person holding a valid, unexpired and unrevoked State of Texas Master Plumber's License, and who has on file with the City a registration form as required in Section 112, except as otherwise hereinafter provided in this section.

The following individuals need not be registered in accordance with Section 112 in order to obtain a permit:

106.7.1 Homestead owner. Permits may be issued to a property owner who wishes to do plumbing work in a building owned and occupied by him as his homestead. The term "to do plumbing work" shall be construed to mean work actually done personally by the owner.

106.7.2 Appliance installation and service. Permits required by this code may be issued for appliance and installation service work done by anyone who is an appliance dealer or is employed by an appliance dealer, and acting as an appliance installation man or appliance service man in connecting appliances to existing piping installations; provided, however, that all work and service named or referred to in this section shall be subject to inspection and approval by the code official in accordance with the terms of this code. If an appliance installer also has a WSPS endorsement from the TCEQ, he can also make the connection into an existing water line, including backflow protection devices.

106.7.3 Licensed Landscape Irrigators. Licensed Landscape Irrigators, when licensed under Article 8751, Tex. Rev. Civ. Stat. Ann., may be issued permits for installation of lawn irrigation systems.

106.7.4 Maintenance employee. Permits required by this code may be issued for plumbing work (not including gas or is not new construction) done by anyone who is regularly employed as or acting as a maintenance man or maintenance employee, incidental to and in connection with the business in which he is employed or engaged or who does not engage in the occupation of a plumber for the general public; or, construction, installation and maintenance work done upon the premises or equipment

plumber for the general public.

106.8 Withholding of permits. The code official is authorized to withhold permits to any person for the reasons set forth herein upon written notice to such person. The determination of the code official may be appealed to the Board as provided in Section 109.

The code official is authorized to withhold the issuance of plumbing permits to:

1. any person until such time as the plumbing or fuel gas for which a permit was previously issued has been completed or is being performed in an efficient manner in a reasonable length of time.

2. any person who is delinquent in the payment of fees owed the City of Fort Worth.

3. any person who has performed previous jobs which remain in violation of this code.

106.9 Administrative hold. Any administrative discrepancy including but not limited to, delinquency in payments, returned checks, failure to pay for reinspection, investigation or registration fees, and failure to keep registration, insurance or bond up-to-date, may result in a hold being placed on issuance of permits and performance of inspections of existing permits until the administrative discrepancy is corrected. For the purpose of this section, the term "up-to-date" shall mean that whenever any of these items is required by this or any other code to obtain a permit covered by this code, it shall be maintained current and in effect until the permit is finaled.

106.10 Job abandonment. If, after a permit is issued under the provisions hereof, the applicant abandons the job, becomes incapacitated or his/her services are terminated prior to final inspection and approval thereof by the code official and before the permit has expired, the applicant or his lawful/legal representative shall immediately notify the office of the code official in writing. Upon such notification, the code official shall immediately have an inspection made of the work completed to that time, and may revoke the outstanding permit and require that a new permit with the payment of fees be obtained before the work is allowed to resume.

SECTION 107
INSPECTIONS AND TESTING

107.1 General. The code official is authorized to conduct such inspections as are deemed necessary to determine compliance with the provisions of this code. Construction or work for which a permit is required shall be subject to inspection by the code official, and such construction or work shall remain accessible and exposed for

inspection purposes until *approved*.

Approval as a result of an inspection shall not be construed to be an approval of a violation of the provisions of this code or of other ordinances of the jurisdiction. Inspections presuming to give authority to violate or cancel the provisions of this code or of other ordinances of the jurisdiction shall not be valid.

It shall be the duty of the permit applicant to cause the work to remain accessible and exposed for inspection purposes. Neither the code official nor the jurisdiction shall be liable for expense entailed in the removal or replacement of material required to allow inspection.

Exceptions: 1. The requirements of this section shall not be considered to prohibit the operation of any plumbing installed to replace existing equipment or fixtures serving an occupied portion of the building in the event a request for inspection of such equipment or fixture has been filed with the Code Official not more than 72 hours after such replacement work is completed, and before any portion of such equipment is concealed by any permanent portion of the building.

2. When approved by the Code Official, the inspection process as required by this code may be performed by an approved Third Party Organization as specified in Section 111.

107.2 Required inspections and testing. The code official, upon notification from the permit holder or the permit holder's agent, shall make the following inspections and such other inspections as necessary, and shall either release that portion of the construction or shall notify the permit holder or an agent of any violations that must be corrected. The holder of the permit shall be responsible for the scheduling of such inspections.

1. Under ground inspection shall be made after trenches or ditches are excavated and bedded, piping installed, and before any backfill is put in place. When excavated soil contains rocks, broken concrete, frozen chunks and other rubble that would damage or break the piping or cause corrosive action, clean backfill shall be on the job site.

2. Rough-in inspection shall be made after the roof, framing, fire blocking, fire stopping, draft stopping and bracing is in place and all sanitary, storm and water distribution piping is roughed-in, and prior to the installation of wall or ceiling membranes.

3. Final inspection shall be made after the building is complete, all plumbing fixtures are in place and properly connected, and the structure is ready for occupancy.

4. Medical gasses and vacuum systems shall be subject to final inspection.

107.2.1 Other inspections. In addition to the inspections specified above, the

code official is authorized to make or require other inspections of any construction work to ascertain compliance with the provisions of this code and other laws which are enforced.

107.2.2 Inspection requests. It shall be the duty of the holder of the permit or their duly authorized agent to notify the code official when work is ready for inspection. It shall be the duty of the permit holder to provide access to and means for inspections of such work that are required by this code. The person doing the work authorized by the permit shall make sure that the work will stand tests prescribed elsewhere in this code, before giving the above notification.

When the work is within a residence where access is dependent upon the occupant being home, it shall be the duty of the person doing the work to make arrangements for inspections. Failure to make arrangements within a timely manner or the inability for the inspector to do the inspections at the arranged times will result in reinspection fees being assessed to the person doing the work.

Exception: If the reinspection fee was for a "Final Inspection" for a residence where access is dependent upon the occupant, after the fee has been paid by the person doing the work additional arrangements for the final inspection and penalties for not receiving such inspection shall fall on the occupant.

This shall not relieve the person doing the work from having to correct improper work and such accompanying penalties should the work fail reinspection.

107.2.3 Approval required. Work shall not be done beyond the point indicated in each successive inspection without first obtaining the approval of the code official. The code official, upon notification, shall make the requested inspections and shall either indicate the portion of the construction that is satisfactory as completed, or notify the permit holder or his or her agent wherein the same fails to comply with this code. Any portions that do not comply shall be corrected and such portion shall not be covered or concealed until authorized by the code official. There shall be a final inspection and approval of all buildings and structures when completed and ready for occupancy and use.

107.2.3.1 Covered Work. Any work covered or concealed without inspection shall be considered to constitute an unsafe structure and subject to the corrective provisions of Section 108.7. Such consideration as an unsafe structure shall exist every day until the work is inspected and approved as being in compliance with this code. Inspections will not be performed until a valid active permit is obtained in accordance with this code.

107.2.4 Approved agencies. The code official is authorized to accept report of

approved inspection agencies, provided that such agencies satisfy the requirements as to qualifications and reliability.

~~**107.2.5 Evaluation and follow-up inspection services.**~~

~~**107.2.5.1. Evaluation service.**~~
~~**107.2.5.2 Follow-up inspection.**~~
~~**107.2.5.3 Test and inspection records.**~~

107.3 Special inspections. Special inspections of *alternative engineered design* plumbing systems shall be conducted in accordance with Sections 107.3.1 and 107.3.2.

107.3.1 Periodic inspection. The registered design professional or designated inspector, in his employ or contract, shall periodically inspect and observe the *alternative engineered design* to determine that the installation is in accordance with the *approved* construction documents. These inspections shall be in addition to the inspections performed by the code official. All discrepancies shall be brought to the immediate attention of the plumbing contractor for correction. Records shall be kept of all inspections.

107.3.2 Written report. The registered design professional shall submit a final report in writing to the code official upon completion of the installation, certifying that the *alternative engineered design* conforms to the *approved* construction documents. ~~A notice of approval for the plumbing system shall not be issued until a written certification has been submitted.~~

107.4 Testing. Plumbing work and systems shall be tested as required in accordance with this section and as follows:

1. *International Plumbing Code*, Section 312.
2. *International Fuel Gas Code*, Section 406.

and in accordance with Sections 107.4.1 through 107.4.3. Tests shall be made by the permit holder and observed by the code official.

107.4.1 New, altered, extended or repaired systems. New plumbing systems and parts of existing systems that have been altered, extended, renovated or repaired shall be tested as prescribed herein to disclose leaks and defects, except that testing is not required in the following cases:

1. In any case that does not include addition to, replacement, alteration or relocation of any water supply, drainage or vent piping.
2. In any case where ~~plumbing~~ water supply, drain, waste and vent and equipment is set up temporarily for exhibition purposes.

107.4.2 Equipment, material and labor for tests. All equipment, material and labor required for testing a plumbing system or part thereof shall be furnished by the

permit holder.

107.4.3 Reinspection and testing. Where any work or installation does not pass any initial test or inspection, the necessary corrections shall be made to comply with this code. The work or installation shall then be resubmitted to the code official for inspection and testing.

107.4.4 Reinspection fees. A reinspection fee may be assessed for each inspection or reinspection when such portion of work for which inspection is called is not complete or when corrections called for are not made.

This section is not to be interpreted as requiring reinspection fees the first time a job is rejected for failure to comply with the requirements of this code, but as controlling the practice of calling for inspections before the job is ready for such inspection or reinspection.

Reinspection fees may be assessed when the inspection record card is not posted or otherwise available on the work site, the approved plans are not readily available to the inspector, for failure to provide access on the date for which inspection is requested, or for deviating from plans requiring the approval of the code official.

To obtain a reinspection, the applicant shall file an application therefor in writing on a form furnished for that purpose and pay the reinspection fee in accordance with Table 106.6.2(1) or as set forth in the fee schedule adopted by the jurisdiction.

In instances where reinspection fees have been assessed, no additional inspection of the work will be performed until the required fees have been paid.

Exception: The fee will not be required for those applicants meeting exception 5 of Section 106.6.2.

107.5 Approval. After the prescribed tests and inspections indicate that the work complies in all respects with this code, a notice of approval shall be issued by the code official.

107.5.1 Revocation. The code official is authorized to, in writing, suspend or revoke a notice of approval issued under the provisions of this code wherever the notice is issued in error, or on the basis of incorrect information supplied, or where it is determined that the building or structure, premise or portion thereof is in violation of any ordinance or regulation or any of the provisions of this code.

107.6 Temporary connection. The code official shall have the authority to authorize the temporary connection of the building or system to the utility source for the purpose of testing plumbing systems or for use under a temporary certificate of occupancy.

107.7 Connection of service utilities. A person shall not make connections from a

utility, source of energy, fuel, power, water system or *sewer* system to any building, ~~or~~ system or equipment that is regulated by this code and for which a permit is required until approved by the code official.

107.8 Inspection card. Work which requires an inspection card as described in the Building Code shall not be commenced until the permit holder or an agent of the permit holder shall have posted or otherwise made available an inspection record card such as to allow the code official to conveniently make the required entries thereon regarding inspection of the work. This card shall be maintained available by the permit holder until final approval has been granted by the code official.

SECTION 108
VIOLATIONS

108.1 Unlawful acts. It shall be unlawful for any person, firm or corporation to erect, construct, alter, repair, remove, demolish or utilize any plumbing system or equipment, or cause same to be done, in conflict with or in violation of any of the provisions of this code.

108.1.1 Unsafe building. Failure to correct an unsafe building as provided for in Section 108.7, 107.2.3 or 107.2.3.1 shall constitute a violation of this code.

108.1.2 Occupancy violations. Whenever any site, building, structure or *equipment* therein regulated by this code or any other code is being used contrary to the provisions of this code or any other code, the code official may order such use discontinued and the structure, or portion thereof, vacated by notice served on any person causing such use to be continued.

Such person shall discontinue the use within the time prescribed by the code official after receipt of such notice to make the site, building, structure, or portion thereof, or equipment comply with the requirements of this code.

108.1.3 Failure to comply with notice. Failure to comply with a notice shall be considered a violation of this code.

108.2 Notice of violation. The code official is authorized to ~~shall~~ serve a notice of violation or order on the person responsible for the erection, installation, alteration, extension, repair, moving, removal, or demolition of plumbing work in violation of the provisions of this code, or in violation of a detail statement or the *approved* construction documents thereunder, or in violation of a permit or certificate issued under the provisions of this code. Such order shall direct the discontinuance of the illegal action or condition and the abatement of the violation.

Exception: Citations for violations of this code may be issued without requiring the issuance of a notice. When a notice is issued, it is not necessary to reissue a

at different locations.

108.3 Prosecution of violation. If the notice of violation is not complied with in the time prescribed by such notice ~~promptly~~, the code official is authorized to ~~shall~~ request the legal counsel of the jurisdiction to institute the appropriate proceedings at law or in equity to restrain, correct or abate such violation, or to require the removal or termination of the unlawful occupancy of the structure in violation of the provisions of this code or of the order or direction made pursuant hereto.

108.4 Violation penalties. Any person who violates a provision of this code or ~~shall~~ fails to comply with any of the requirements thereof or who ~~shall~~ erects, installs, alters or repairs plumbing work in violation of the *approved* construction documents or directive of the code official, or of a permit or certificate issued under the provisions of this code, shall be subject to penalties as prescribed by law. ~~guilty of a […], punishable by a fine of not more than […] dollars or by imprisonment not exceeding […] , or both such fine and imprisonment.~~

Each day ~~that~~ or any portion thereof during which a violation of this ordinance occurs or continues ~~after due notice has been served~~ shall be deemed a separate offense and upon conviction thereof shall be punishable as prescribed by law.

108.5 Stop work orders. Whenever the code official finds any work regulated by this code being performed in a manner either contrary to the provisions of this code or dangerous or unsafe, the code official is authorized to issue a stop work order.

108.5.1 Notice to owner. Upon notice from the code official, work on any plumbing system that is being done contrary to the provisions of this code or in a dangerous or unsafe manner shall immediately cease. Such notice shall be in writing and shall be given to the owner of the property involved, or to the owner's agent, or to the person doing the work. The notice shall state the conditions under which work is authorized to resume. Where an emergency exists, the code official shall not be required to give a written notice prior to stopping the work.

108.5.2 Unlawful continuance. Any person who shall continue any work ~~in or about the structure~~ after having been served with a stop work order, except such work as that person is directed to perform to remove a violation or unsafe condition, shall be subject to penalties as prescribed by law ~~liable to a fine of not less than […] dollars or more than […] dollars.~~

108.6 Abatement of violation. The imposition of the penalties herein prescribed shall not preclude the legal officer of the jurisdiction from instituting appropriate action to prevent unlawful construction or to restrain, correct or abate a violation, or to prevent illegal occupancy of a building, structure or premises, or to stop an illegal act, conduct, business or utilization of the plumbing on or about any premises.

108.7 Unsafe plumbing. Any plumbing regulated by this code that is unsafe or that constitutes a fire or health hazard, insanitary condition, or is otherwise dangerous to human life is hereby declared unsafe. Any use of plumbing regulated by this code constituting a hazard to safety, health or public welfare by reason of inadequate maintenance, dilapidation, obsolescence, fire hazard, disaster, damage or abandonment is hereby declared an unsafe use. Any such unsafe equipment is hereby declared to be a public nuisance and shall be abated by repair, rehabilitation, demolition or removal.

A vacant structure that is not secured against entry shall be deemed unsafe. Materials used to secure a structure, which deteriorate or increase in susceptibility to fire hazard over time, shall be replaced or treated to eliminate the increase of the hazard.

108.7.1 Authority to condemn equipment. Whenever the code official determines that any plumbing or equipment, or portion thereof, regulated by this code has become hazardous to life, health or property or has become insanitary, or is otherwise dangerous to human life, the code official shall order in writing that such plumbing or equipment either be removed or restored to a safe or sanitary condition. A time limit for compliance with such order shall be specified in the written notice. No person shall use or maintain defective plumbing or fuel gas system after receiving such notice.

When such plumbing is to be disconnected, written notice as prescribed in Section 108.2 shall be given. In cases of immediate danger to life or property, such disconnection shall be made immediately without such notice.

108.7.2 Authority to disconnection service utilities. The code official shall have the authority to authorize disconnection of any plumbing, energy source or utility service to the building, structure or system regulated by ~~the technical~~ this code in case of emergency, where necessary, to eliminate an immediate danger to life or property. Where possible, the owner and occupant of the building, structure or service system shall be notified of the decision to disconnect ~~utility service~~ prior to taking such action. If not notified prior to disconnecting, the owner or occupant of the building, structure or service systems shall be notified in writing, as soon as practical thereafter.

108.7.3 Connection after order to disconnect. No person shall make connections from any energy, fuel, power supply or water distribution system or supply energy, fuel, power or water to any equipment regulated by this code that has been disconnected or ordered to be disconnected by the code official or the use of which has been ordered to be discontinued by the code official until the code official authorizes the reconnection and use of such equipment.

Where any plumbing is maintained in violation of this code, and in violation of any notice issued pursuant to the provisions of this section, the code official shall institute any appropriate action to prevent, restrain, correct or abate the violation.

108.7.4 Covered work. Any work covered or concealed without inspection shall be considered to constitute an unsafe structure. Such consideration as an unsafe structure shall exist every day until the work is inspected and approved as being in compliance with this code. Inspections will not be performed until a valid active permit is obtained in accordance with this code.

108.7.5 Record. The code official shall cause a report to be filed on an unsafe condition. The report shall state the occupancy of the structure and the nature of the unsafe condition.

108.7.6 Notice. If an unsafe condition is found, the code official shall serve on the owner, agent or person in control of the structure, a written notice that describes the condition deemed unsafe and specified the required repairs or improvements to be made to abate the unsafe condition, or that requires the unsafe structure to be demolished within a stipulated time.

108.7.7 Method of service. Such notice shall be deemed properly served if delivered in accordance with the standard method accepted by the jurisdiction.

108.7.8 Restoration. The structure or equipment determined to be unsafe by the *building official* is permitted to be restored to a safe condition.

~~SECTION 109~~
~~MEANS OF APPEAL~~

SECTION 109
CONSTRUCTION AND FIRE PREVENTION BOARD OF APPEALS

109.1 General. Applications for appeals shall be made to the Construction and Fire Prevention Board of Appeals as authorized and provided for in the Building Code. All references to the "Board" shall be deemed to refer to the Construction and Fire Prevention Board of Appeals.

SECTION 110
TEMPORARY EQUIPMENT, SYSTEMS AND USES

110.1 General. The code official is authorized to issue a permit for temporary equipment, systems and uses. Such permits shall be limited as to time of service, but shall not be permitted for more than 180 days. The code official is authorized to grant extensions for demonstrated cause.

110.2 Conformance. Temporary equipment, systems and uses shall conform to the structural strength, fire safety, means of egress, accessibility, light, ventilation, energy and sanitary requirements of this code, as deemed appropriate by the code official and Fire Chief, as necessary to ensure the public health, safety and general welfare.

110.3 Temporary utilities. The code official is authorized to give permission to temporarily supply utilities and use power before an installation has been fully completed and the final certificate of completion has been issued. The part covered by the temporary certificate shall comply with the requirements specified for temporary lighting, heat or power in the code.

110.4 Termination of approval. The code official is authorized to terminate such permit for temporary equipment, systems or uses and to order the temporary equipment, systems or uses to be discontinued.

SECTION 111
THIRD PARTY PLAN REVIEW AND INSPECTION

111.1 When approved by the code official, Third Party Organizations may be permitted to perform the plan review and/or field inspection provisions of this code. When authorized to perform services, the Third Party Organization shall comply with the provisions of the Building Code.

SECTION 112
BUSINESS REGISTRATION

112.1 Registration.

112.1.1 General. Any firm, business or organization conducting any work related to this code shall have on file in the Department of Planning and Development a valid Business Registration signed by an official of the business hereafter to be known as Registered Official. Such Registered Official shall hold a valid State of Texas Master Plumber License or Texas Board of Irrigator License when required by the State of Texas and this code. Such Business Registration shall be renewed annually effective January 1

of each year. The fees for the initial registration and the renewal shall be as specified in Table 106.6.2(2).

Exception: Based upon staffing and work loads, the code official may adjust the renewal dates of existing registrations to be equally distributed throughout the year as long as the fees are appropriately prorated.

The holder of a Business Registration who fails to pay the annual fee due for such registration within thirty (30) days of the expiration date shall also be required to pay a late fee as specified in Table 106.6.2(2).

112.1.2 Restrictions of Registration. Registered Officials shall not be simultaneously employed by, or work for more than one business for the purpose of obtaining permits under this code or for the purpose of doing or supervising work that can only be done by authority of a permit obtained under the provisions of this code.

Only one registered official for each business registration will be recognized for the purpose of obtaining permits. The registered official shall keep the Department of Planning and Development notified of any change in his/her employment.

112.1.3 Identification. Vehicles used commercially by the Registered Business shall be properly identified with the registered business name and State of Texas Master Plumber's License number or Texas Board of Irrigator's License number, when such license is required for a Plumbing Business Registration. This identification shall be affixed or painted on both sides of the vehicle so as to be in full view at all times and in letters not less than two and one-half inches high.

Any plumbing license holder or endorsee of a plumbing license shall carry their license and a valid picture ID on their person at all times while performing plumbing work, and they shall produce and present such license and picture ID immediately upon request by an Inspector.

112.2 Registration suspended, repealed, or revoked.

112.2.1 General. A business registration or permit may be suspended, repealed or revoked by the Code Official by reason of the occurrence of one or more of the following:

1. Adjudication of insanity;

2. Fraud or misrepresentation in obtaining a registration or permit;

3. Violation of a provision of this ordinance, the Building, Residential, Energy, Mechanical or Electrical Codes or any other regulatory ordinances of the City applicable to plumbing work;

4. Conviction of defrauding a person for whom he has rendered or contracted to render service;

5. Failure to obtain a permit or the attempted assignment of a permit for others;

6. Failure to pay fees or the voluntary or involuntary filing of bankruptcy proceedings by or against the firm, partnership, association, or corporation with a business registration with the City;

7. The sending of six (6) notifications within a six (6) month period that the registered business is in violation of this code; and,

8. When a state license is expired or suspended for any reason.

112.2.2 Work suspension. Upon suspension or revocation of said business registration, same shall be null and void and no work thereafter may be performed thereunder.

112.2.3 Board affirmation. Upon appeal to the Board, the Board may affirm, revise or modify such suspension or revocation.

(b) The remaining sections of the 2009 *International Plumbing Code* are hereby amended as follows:

IPC TABLE OF CONTENTS

**IPC Table of Contents, Chapter 7, Section 714; changed to read as follows:*

Section 714 Engineered ~~Computerized~~ Drainage Design 67

IPC SECTION 202

**IPC Section 202; the definitions of "Code Official", "Plumbing" and "Plumbing System" are changed and new definitions are added to read as follows:*

BUILDING CODE. Building Code shall mean the *International Building Code* as adopted by this jurisdiction.

CHANGE OF OCCUPANCY. A change in the purpose or level of activity within a building that involves a change in application of the requirements of this code. The definition shall also apply to the usage of the surrounding site and access to and from the building, structure or site, as necessary to achieve the purpose of this code, and to obtain compliance with other codes and ordinances of this jurisdiction.

CODE OFFICIAL. The officer or other designated authority charged with the administration and enforcement of this code, or a duly authorized representative. For the purpose of this code, the Code Official shall be the Building Official, and his regularly authorized deputy shall be the Chief Plumbing Inspector.

ELECTRICAL CODE. Electrical Code shall mean the *National Electrical Code* as adopted by this jurisdiction. For the purpose of this code, all references to NFPA 70 and the *ICC Electrical Code* shall be assumed to mean the Electrical Code as defined herein.

ENERGY CODE. Energy Code shall mean the *International Energy Code* as adopted by this jurisdiction.

FIRE PREVENTION CODE (FIRE CODE). Fire Prevention Code, or Fire Code, shall mean the *International Fire Code* as adopted by this jurisdiction.

FUEL GAS CODE. Fuel Gas code shall mean the *International Fuel Gas Code* as adopted by this jurisdiction and shall be considered as part of the Plumbing Code. (See Plumbing Code.)

MECHANICAL CODE. Mechanical Code shall mean the *International Mechanical*

Code as adopted by this jurisdiction.

PLUMBING.
For the purpose of using the *International Plumbing Code*, as adopted, shall mean:

The practice, materials and fixtures utilized in the installation, maintenance, extension and alteration of all piping, fixtures, plumbing appliances and plumbing appurtenances, within or adjacent to any structure, in connection with sanitary drainage or storm drainage facilities; venting systems, and public or private water supply systems.

For the purpose of complying with the Texas State Plumbing License Law, shall mean:

All piping, fixtures, appurtenances, and appliances, including disposal systems, drain or waste pipes, or any combination of these that:

supply, recirculate, drain, or eliminate water, gas, medical gasses and vacuum, liquids, and sewage for all personal or domestic purposes in and about buildings where persons live, work, or assemble; connect the building on its outside with the source of water, gas, or other liquid supply, or combinations of these, on the premises, or the water main on public property; and carry waste water or sewage from or within a building to the sewer service lateral on public property or the disposal or septic terminal that holds private or domestic sewage.

The installation, repair, service, maintenance, alteration, or renovation of all piping, fixtures, appurtenances, and appliances on premises where persons live, work, or assemble that supply gas, medical gasses and vacuum, water, liquids, or any combination of these, or dispose of waste water or sewage.

PLUMBING CODE. Plumbing Code shall mean the *International Plumbing Code* and the *International Fuel Gas Code* as adopted by this jurisdiction. The term "Plumbing Code" applies to both codes as one combined code.

PLUMBING SYSTEM.
For the purpose of using the *International Plumbing Code*, as adopted, shall mean:

Includes the water supply and distribution pipes; plumbing fixtures and traps; water-treating or water-using equipment; soil, waste and vent pipes; and sanitary and storm sewers and building drains, in addition to their respective connections, devices and appurtenances within a structure or premise.

RESIDENDIAL CODE. Residential Code shall mean the *International Residential Code* as adopted by this jurisdiction.

IPC SECTION 301

**IPC Section 301.6; changed to read as follows:*

301.6 Prohibited locations. Plumbing systems shall not be located in an elevator shaft or in an elevator equipment room.

Exception: Floor drains, sumps and sump pumps shall be permitted at the base of the shaft, provided that they are indirectly connected to the plumbing system and comply with Sections 315 and 1003.4.

**IPC Section 301.8; added to read as follows:*

301.8 Location. Except as otherwise provided in this Code or other applicable ordinances, no plumbing system, drainage system, building sewer, private sewage disposal system or parts thereof, shall be located in any lot other than the lot which is the site of the building, structure, or premises served by such facilities.

No subdivision, sale, or transfer of ownership of existing property shall be made in such manner that the area, clearance, and access requirements of this Code are decreased.

IPC SECTION 305

**IPC Section 305.6; changed to read as follows:*

305.6 Freezing. Water, soil and waste pipes shall not be installed outside of a building, in attics or crawl spaces, concealed in outside walls, or in any other place subjected to freezing temperatures unless adequate provision is made to protect such pipes from freezing by insulation (3/4" wall in attics or under floor and ½" wall in exterior walls) or heat or both. Exterior water supply system piping shall be installed not less than 6 inches (152 mm) below the frost line and not less than 12 inches (305 mm) below grade.

**IPC Section 305.6.1; changed to read as follows:*

305.6.1 Sewer depth. ~~Building sewers that connect to private sewage disposal systems shall be a minimum of [number] inches (mm) below finished grade at the point of septic tank connection.~~ Building sewers shall be a minimum of 12 inches (304 mm) below grade.

**IPC Section 305.9; changed to read as follows:*

305.9 Protection of components of plumbing system. Components of a plumbing

system installed within 3 feet along alleyways, driveways, parking garages or other locations in a manner in which they would be exposed to damage shall be recessed into the wall or otherwise protected in an approved manner.

IPC SECTION 310

**IPC Section 310.4; delete.*

**IPC Section 310.5; delete.*

IPC SECTION 312

**IPC Sections 312.10.1 and 312.10.2; changed to read as follows:*

312.10.1 Inspections. Annual inspections shall be made of all backflow prevention assemblies and air gaps to determine whether they are operable. In the absence of local provisions, the owner is responsible to ensure that testing is performed.

312.10.2 Testing. Reduced pressure principle backflow preventer assemblies, double check-valve assemblies, pressure vacuum breaker assemblies, reduced pressure detector fire protection backflow prevention assemblies, double check detector fire protection backflow prevention assemblies, hose connection backflow preventers, and spillproof vacuum breakers shall be tested at the time of installation, immediately after repairs or relocation and at least annually. The testing procedure shall be performed in accordance with applicable local provisions. In the absence of local provisions, the owner is responsible to ensure that testing is done in accordance with one of the following standards:

{list of standards unchanged}

IPC SECTION 314

**IPC Section 314.2.1; change to read as follows:*

314.2.1 Condensate disposal. Condensate from all cooling coils and evaporators shall be conveyed from the drain pan outlet to an *approved* place of disposal. Such piping shall maintain a minimum horizontal slope in the direction of discharge of not less than one-eight unit vertical in 12 units horizontal (1-percent slope). Condensate shall not discharge in a publicly exposed area such as into a street, alley, sidewalk or other areas so as to cause a nuisance. Rooftop units may be piped to discharge into roof drains when such drains do not discharge in a publicly exposed area as listed above.

**IPC Section 314.2.2; change to read as follows:*

314.2.2 Drain pipe materials and sizes. Components of the condensate disposal system shall be cast iron, galvanized steel, copper, cross-linked polyethylene, ~~polybutylene~~, polyethylene, ABS, CPVC or PVC (schedule 80 PVC when exposed to ultra violet light) pipe or tubing. All components shall be selected for the pressure, ~~and~~ temperature and exposure rating of the installation. Joints and connections shall be made in accordance with the applicable provisions of Chapter 7 relative to the material type. Condensate waste and drain line size shall be not less than the discharge size of the pan but not less than ¾-inch (19 mm) internal diameter and shall not . . . *{bulk of paragraph unchanged}* . . . in accordance with Table 314.2.2. All horizontal sections of drain piping shall be installed in uniform alignment at a uniform slope.

**IPC Section 314.2.3, item #2; add a sentence to read as follows:*

The conspicuous point of disposal shall not create a hazard such as dripping over a walking surface or other areas so as to create a nuisance.

SECTION 315

**IPC Section 315; added to read as follows:*

SECTION 315
ELEVATOR DRAINAGE

315.1 Elevator Drainage. Drainage shall be provided in the elevator pits as required by the Elevator Code and as listed in this section. Drainage discharge, whether drainage is required or voluntary, shall comply with Section 315.4.

315.2 Pits. (**ASME A17.1 – Section 2.2.1; Inquiry 07-50**) A pit shall be provided for each individual elevator.

315.3 Drainage. (**ASME A17.1 – Section 2.2.2.3 thru 2.2.2.6**)

2.2.2.3 Permanent provisions shall be made to prevent accumulation of ground water in the pit.

2.2.2.4 Drains and sump pumps, where provided, shall comply with the applicable plumbing code, and they shall be provided with a positive means to prevent water, gases, and odors from entering the hoistway.

2.2.2.5 In elevators provided with Firefighters' Emergency Operation, a drain or sump pump shall be provided. The sump pump/drain shall have the capacity to remove a minimum of 11.4 m^3/h (3,000 gal/h) per elevator.

2.2.2.6 Sumps and sump pumps in pits, where provide, shall be covered. The

315.4 Discharge. Discharge shall comply with the following:

1. Where there is no expectation of hydraulic fluid or oil contamination, the sump may discharge into the sanitary sewer system.
2. If installed in a location with possible contamination, a trap or interceptor rated for the expected flow rate with a minimum "storage" capacity equivalent to the volume of hydraulic fluid or oil that could be leaked into the sump, will be required prior to discharge into the sanitary sewer.
3. In either situation, discharge to the storm drainage system is not permitted.
4. Gravity drains that comply with the above provisions should be discussed with the Chief Plumbing Inspector before installation.
5. Drainage to a storage tank is not permitted without specific approval.

315.5 Other pipes, ducts or electrical wiring. See Building Code, Sections 3004.4 and 3006.6 and the following:

(**ASME A17.1 – Section 2.8.2.2**) Only such electrical wiring, raceways, cables, coaxial wiring, and antennas used directly in connection with the elevator, including wiring for signals, for communication with the car, for lighting, heating, air conditioning, and ventilating the car, for fire detecting systems, for pit sump pumps, and for heating and lighting the hoistway and/or the machinery space, machine room, control space, or control room shall be permitted to be installed inside the hoistway, machinery space, machine room, control space, or control room.

(**ASME A17.1 – Section 2.8.3.4**) Other pipes or ducts conveying gases, vapors, or liquid and not used in connection with the operation of the elevator shall not be installed in any hoistway, machinery space, machine room, control space or control room.

IPC SECTION 401

**IPC Section 401.1; add a sentence to read as follows:*

The provisions of this Chapter are meant to work in coordination with the provisions of the Building Code. Should any conflicts arise between the two chapters, the Code Official shall determine which provision applies.

IPC SECTION 403

**IBC Section 403.1; changed and 403.1.3 added to read as follows:*

403.1 Minimum number of fixtures. Plumbing fixtures shall be provided for the type of occupancy and in the minimum number as follows:

1.. Assembly Occupancies: At least one drinking fountain shall be provided at each floor level in an approved location. Water closets shall be provided for the public, for inside or outdoor uses. Such water closets may be counted for compliance as specified in item #2 for employees. (See also Table 403.1, footnote e.)

Exceptions: 1. A drinking fountain need not be provided in a drinking or dining establishment.

2. Drinking fountains are not required for an occupant load of 15 or fewer. (See Table 403.1, footnote f)

2. Groups A, B, F, H, I, M and S Occupancies: Buildings or portions thereof shall be provided with at least one employee or customer water closet for each sex except as provided for in Section 403.2.

   In Groups I-2 and I-3 Occupancies, toilet facilities for employees shall be separate from facilities for inmates or patients.

3. Group E Occupancies: Shall be provided with fixtures as shown in Table 403.1.
4. Group R Occupancies: Shall be provided with fixtures as shown in Table 403.1.
5. Self-service storage facilities: shall be provided with one unisex accessible restroom for tenant usage.
6. Each Recreational Vehicle Park, or portion of a Manufactured Home Park used for recreational vehicles, shall contain one (1) or more service buildings providing separate sanitary facilities for men and women.

   a. No lot space shall be located farther than five hundred (500) feet from such a service building.

   b. The entrances to such buildings shall be clearly marked to show which gender the facilities serve.

   c. Fixtures shall be provided at the following ratio per twenty (20) lots or fraction thereof:

Toilets:	Men (1) / Women (2)
Urinals:	Men (1)
Lavatories:	Men (1) / Women (1)
Showers:	Men (1) / Women (1)

   d. Each building providing sanitary fixtures shall contain at least one (1) slop sink.

   e. If male and female sanitary facilities are housed within the same structure, they shall be separated by walls extending from the floor to the ceiling.

   f. Toilets shall be located in separate compartments equipped with self-closing

doors. Shower stalls shall be individual and equipped with self-closing doors. If dressing compartments are provided, each compartment shall be equipped with a stool or a bench. The rooms shall be screened to prevent direct view of the interior when the exterior doors are open.

It is recommended, but not required, that the minimum number of fixtures provided also comply with the number shown in Table 403.1. Types of occupancies not shown in Table 403.1 shall be considered individually by the code official. The number of occupants shall be determined by the *International Building Code*. Occupancy classification shall be determined in accordance with the *International Building Code*.

403.1.1 Fixture calculation. (*unchanged*)

403.1.2 Family or assisted-use toilet and bath fixtures. (*unchanged*)

403.1.3 Finish material. Finish materials shall comply with Section 1210 of the Building Code.

**IPC Section 403.2; changed to read as follows:*

403.2 Separate facilities. Where plumbing fixtures are required, separate facilities shall be provided for each sex.

Exceptions:

1. Separate facilities shall not be required for private dwelling units or sleeping units.
2. Separate facilities shall not be required in structures or tenant spaces with a total *occupant load*, including both employees and customers, of 15 or less.
3. Separate facilities shall not be required in mercantile occupancies in which the maximum occupant load is 100 ~~50~~ or less.
4. Separate facilities shall not be required in occupancies that do not exceed 750 square feet.
5. Self-service storage facilities need only provide one unisex restroom for storage tenant usage. A single unisex employee restroom, when permitted and when accessible by the tenants, may count for such restroom. Such restroom shall be located near the facility entrance. Spaces converted to uses other than self-service storage shall comply with other applicable restroom provisions for that individual space.
6. Aircraft T-hangar facilities need not install tenant restrooms when in compliance with the following:
    a. Each such tenant hangar space is less than 2,000 square feet in area.
    b. There are restrooms located within 500 feet of the lease space.

**IPC Section 403.3.2; add exceptions 2, 3 and 4 to read as follows:*

2. Facilities that are required for employees in storage structures, guard shacks or kiosks, and are located in adjacent structures under the same ownership, lease or control, shall be a maximum travel distance of 500 feet (152 m) from the employees' working area.

3. Facilities that are required for Group E portable classrooms may be located in the main structure if provided with a covered walkway and the maximum travel distance does not exceed 500 feet (152 m) from the classroom.

4. Facilities that are required for a Group B portable classrooms associated with a religious use may be located in the main structure if the maximum travel distance does not exceed 500 feet (152 m) from the classroom.

IPC SECTION 404

**IPC Section 404.1; add a second paragraph to read as follows:*

(RH) Accessible restrooms in existing buildings shall be required in accordance with Section 3411 of the Building Code.

Exceptions:

a. A new use that requires two accessible restrooms in a space where one non-accessible restroom already exists shall only require the addition of a second unisex accessible restroom.
b. A new use that requires two accessible restrooms in a space where two non-accessible restrooms already exists shall only require the conversion of one restroom to a unisex accessible restroom, or the installation of a third unisex accessible restroom.
c. When the change of use is to an equal or lower use group, in the order as listed below, the number of required restrooms shall be provided as listed in this section but any existing restroom need not be upgraded to accessibility requirements.

Group A – where food and beverages are served for consumption on the premise
Group E
Group B – where food and beverages are served for consumption on the premise
Group M
Group I
Group A – other than as listed above
Group B – other than as listed above
Group F, S

Group H
Group R

Where it is technically infeasible to comply with the new construction standards for any of these requirements for a change of group or occupancy, the above items shall conform to the requirements to the maximum extent technically feasible. Change of group or occupancy that incorporates any alterations or additions shall comply with the provisions for new construction for such alterations or additions. Other areas not involved with the alteration or addition work shall comply with this code and the Building Code.

IPC SECTION 405

**IPC Section 405.6; delete.*

IPC SECTION 409

**IPC Section 409.2; change to read as follows:*

409.2 Water connection. The water supply to a commercial dishwashing machine shall be protected against backflow by an air gap or backflow preventer in accordance with Section 608.

IPC SECTION 410

**IPC Section 410.1; change to read as follows:*

410.1 Approval. Drinking fountains shall conform to ASME A112.19.1M, ASME A112.19.2M or ASME A112.19.9M, and water coolers shall conform to ARI 1010. Drinking fountains and water coolers shall conform to NSF 61, Section 9. ~~Where water is served in restaurants, dinking fountains shall not be required. In other occupancies, where drinking fountains are required, water coolers or bottled water dispensers shall be permitted to be substituted for not more than 50 percent of the required drinking fountains.~~

Exception: A drinking fountain need not be provided in a drinking or dining establishment.

IPC SECTION 412

**IPC Section 412.4; changed to read as follows:*

412.4 Required location ~~Public laundries and central washing facilities~~. Floor drains shall be installed in the following areas.

1. In public coin-operated laundries and in the central washing facilities of multiple family dwellings, the rooms containing the automatic clothes washers shall be provided with floor drains located to readily drain the entire floor area. Such drains shall have a minimum outlet cross section of not less than 3 inches (76 mm) in diameter.
2. Toilet rooms containing two (2) or more water closets or a combination of one (1) water closet and one (1) urinal, except in a dwelling unit. The floor shall slope toward the floor drains.
2. Commercial kitchens. (In lieu of floor drains in commercial kitchens, the code official may accept floor sinks.)

IPC SECTION 417

**IPC Section 417.5; changed to read as follows:*

417.5 Shower floors or receptors. Floor surfaces shall be constructed of impervious, noncorrosive, nonabsorbent and waterproof materials.

Thresholds shall be a minimum of 2 inches (51 mm) and a maximum of 9 inches (229 mm), measured from top of the drain to top of threshold or dam.

Exception: Showers designed to comply with ICC/ANSI A117.1 need not have a threshold.

**IPC Section 417.5.2; changed to read as follows:*

417.5.2 Shower lining. Floors under shower compartments, except where prefabricated receptors have been provided, shall be lined and made water tight utilizing material complying with Sections 417.5.2.1 through 417.5.2.5. Such liners shall turn up on all sides at least ~~2~~ 3 inches (~~51~~ 76 mm) above the finished threshold level and shall extend outward over the threshold and fastened to the outside of the threshold jamb. Liners shall be recessed and fastened to an *approved* backing . . . *{bulk of section unchanged}* . . . . shall be tested in accordance with Section 312.9.

IPC SECTION 419

**IPC Section 419.3; changed to read as follows:*

419.3 Surrounding material. Wall and floor space to a point 2 feet (610 mm) in front of a urinal lip and 4 feet (1219 mm) above the floor and at least 2 feet (610 mm) to

each side of the urinal shall be waterproofed with a smooth, readily cleanable, hard, nonabsorbent material.

**IPC Section 419.4; added to read as follows:*

419.4 Waterless urinals. Installation of waterless urinals shall be permitted when installed in accordance with the following:

(SL – HB 2667-2009, Section 372.006(c)). A person who installs a nonwater-supplied urinal shall install water distribution and fixture supply piping sized to accommodate a water-supplied urinal to an in-wall point immediately adjacent to the nonwater-supplied urinal location so that the nonwater-supplied urinal can be replaced with a water-supplied urinal if desired by the owner or required by a code enforcement officer.

IPC SECTION 501

**IPC 501.8; add a sentence to read as follows:*

Temperature controls of a water heater shall not be used as the temperature control for tempered water.

IPC SECTION 502

**IPC Section 502.3; changed to read as follows:*

502.3 Water heaters installed in attics. Attics containing a water heater shall be provided . . . *{bulk of paragraph unchanged}* . . . side of the water heater. The clear *access* opening dimensions shall be a minimum of 20 inches by 30 inches (508 mm by 762 mm), or larger where such dimensions are not large enough to allow removal of the water heater.

Water heaters shall not be installed in residential attics.

Exception: Tankless water heaters.

**IPC Section 502.3.1; added to read as follows:*

502.3.1 Electrical requirements. A luminair controlled by a switch located at the required passageway opening and a receptacle outlet shall be provided at or near the equipment location in accordance with the electrical code.

**IPC Section 502.6 and 502.6.1; added to read as follows:*

502.6 Water heaters above ground or floor. When the mezzanine or platform in which a water heater exceeding a capacity of 10 gallons is installed is more than eight (8) feet (2438 mm) above the ground or floor level, it shall be made accessible by a stairway or permanent ladder fastened to the building.

Exception: A maximum 10 gallon water heater (or larger with approval) is capable of being accessed through a lay-in ceiling and is installed not more than ten (10) feet (3049 mm) above the ground or floor level and may be reached with a portable ladder.

502.6.1 Electrical requirements. Whenever the mezzanine or platform is not adequately lighted or access to a receptacle outlet is not obtainable from the main level, lighting and a receptacle outlet shall be provided in accordance with Section 502.3.1.

IPC SECTION 504

**IPC Section 504.6; changed to read as follows:*

504.6 Requirements for discharge piping. The discharge piping serving a pressure relief valve, temperature relief valve or combination thereof shall:

1. Not be directly connected to the drainage system.
2. When the drain pipe is run exposed in an area outside of the room where the water heater is located, in a manner that would make it subject to damage, the drain shall discharge through an *air gap* located in the same room as the water heater.
3. Not be smaller than the diameter of the outlet of the valve served and shall discharge full size to the point of disposal ~~*air gap*~~.
4. Serve a single relief device and shall not connect to piping serving any other relief device or equipment.

   Exception: Multiple relief devices of a single tenant may be installed to a single T & P discharge piping system when *approved* by the code official and permitted by the manufacture's installation instructions and installed with those instructions. Relief devices of multiple tenants may only share the same discharge system when *approved* by the code official and the discharge point is in a common area under the building owner's control.

5. Discharge to the floor drain, ~~to the pan serving the water heater or storage tank~~, to an indirect waste receptor or to the outdoors. The point of disposal shall not be in another tenant area. Where discharging to the outdoors in areas subject to

through an *air gap* located in a conditioned area. The discharge pipe shall not discharge into the pan required in Section 504.7.

6. Discharge in a manner that does not cause personal injury or structural damage.
7. Discharge to a termination point that is readily observable by the building occupants.
8. Not be trapped.
9. Be installed so as to flow by gravity.
10. Not terminate more than 6 inches (152 mm) above the floor drain or waste receptor. When discharging outside the building, the point of discharge shall be with the end of the pipe not more than two (2) feet (610 mm) nor less than six (6) inches (152 mm) above the ground or the floor level of the area receiving the discharge and pointing downward.
11. Not have a threaded connection at the end of such piping.
12. Not have valves or tee fittings.
13. Be constructed of those materials listed in Section 605.4 or materials tested, rated and *approved* for such use in accordance with ASME A112.4.1.

IPC SECTION 506

**IPC Section 506; added to read as follows:*

506.1 Combustion air and ventilation. Combustion air and ventilation for fuel burning water heaters, other than gas-fired, shall be in accordance with the *International Mechanical Code*. Combustion air and ventilation for gas-fired water heaters shall be in accordance with the *International Fuel Gas Code.*

IPC SECTION 602

**IPC Section 602.1; changed to read as follows:*

602.1 General. Every plumbing fixture within a structure ~~equipped with plumbing fixtures and~~ utilized for human occupancy or habitation shall be provided with a potable supply of cold water in the amounts and at the pressures specified in this chapter. Hot water may also be required as specified in Section 607.

Exception: Waterless urinals, when *approved*.

**IPC Section 602.4; added to read as follows:*

602.4 Manufactured Home Parks and Recreational Vehicle Parks.

1. An accessible, adequate, safe and potable supply of water under pressure shall be

domestic purposes. Connection shall be made to the public water system.

2. The water supply system of a manufactured home park and recreational vehicle park shall be connected by pipes to all manufactured homes, recreational vehicles, buildings, and other facilities requiring water, with water flowing under pressure to each connection at all times.

3. Service lines, valves, and riser pipes shall be insulated pursuant to this code.

IPC SECTION 604

**IPC Section 604.9; add an exception to read as follows:*

Exception: Water-hammer arrestors shall not be required in residential applications.

**IPC Section 604.4 .1; added to read as follows:*

604.4.1 State maximum flow rate. Where the State mandated maximum flow rate is more restrictive than those of this section, the State flow rate shall take precedence.

**IPC Section 604.9; add an exception to read as follows:*

Exception: Residential applications, i.e., dishwashers, washing machines or ice makers.

IPC SECTION 606

**IPC Section 606.1; delete items #4 and 5.*

**IPC Section 606.1; change item #8 to read as follows:*

8. On the water supply pipe to every water heater or hot water storage tank. The valve shall be accessible on the same floor, located near the equipment and only serving the hot water storage tank or water heater. The valve shall not interfere or cause a disruption of the cold water supply to the remainder of the cold water system.

**IPC Section 606.2, item #2; delete.*

IPC SECTION 607

**IPC Section 607.1; changed to read as follows:*

607.1 Where required.

(a) Residential occupancies. In residential *occupancies*, cold and *hot water* shall be supplied to all plumbing fixtures and equipment utilized for bathing, washing, culinary purposes, cleansing, laundry or building maintenance.

Exception: Other than sinks, cold and tempered, or a single tempered only, water shall be delivered to accessible hand washing fixtures such as lavatories and hand washing basins.

(b) Non-residential occupancies. In nonresidential *occupancies*, cold and *hot water* shall be supplied to all plumbing fixtures and equipment utilized for culinary purposes, cleansing, laundry or building maintenance purposes.

Exceptions: 1. In nonresidential *occupancies*, cold and *hot water*, or cold and *tempered water*, or *tempered water* only, shall be supplied for bathing and washing purposes.

2. Other than sinks, cold and tempered, or a single tempered only, water shall be delivered from accessible hand-washing fixtures such as lavatories and hand washing basins.

3. Cold and tempered, or a single tempered only, water shall be provided to lavatories in public facility rest rooms.

(c) *Tempered water* shall be supplied through a water temperature limiting device that conforms to ASSE 1070 and shall limit the *tempered water* to a maximum of 110º F (43º C). This provision shall not supersede the requirement for protective shower valves in accordance with Section 424.3.

IPC SECTION 608

**IPC Section 608.1; changed to read as follows:*

608.1 General. A potable water supply system shall be designed, installed and maintained in such a manner so as to prevent contamination from nonpotable liquids, solids or gases being introduced into the potable water supply through cross-connections or any other piping connections to the system. Back flow preventer applications shall conform to applicable local regulations, Table 608.1, ~~except~~ and as specifically stated in Sections 608.2 through 608.16.9.

**IPC Section 608.8; add the following sentence:*

This section shall only apply to nonpotable piping systems not already covered under Appendix H, Water Recovery.

**IPC Section 608.16.5; changed to read as follows:*

608.16.5 Connections to lawn irrigation systems. The potable water supply to lawn irrigation systems shall be protected against backflow by an atmospheric-type vacuum breaker, a pressure-type vacuum breaker, a double-check assembly or a reduced pressure principle backflow preventer. A valve . . . *{remainder of section unchanged}* . . . backflow preventer.

**IPC Section 608.17; changed to read as follows:*

608.17 Protection of individual water supplies. An individual water supply shall be located and constructed so as to be safeguarded against contamination in accordance with applicable local regulations. In the absence of other local regulations, installation shall be in accordance with Sections 608.17.1 through 608.17.8.

IPC SECTION 610

**IPC Section 610.1; add an exception to read as follows:*

Exception: The code official may waive this requirement when deemed unnecessary.

IPC SECTION 613

**IPC Section 613.1; add a sentence to read as follows.*

Temperature controls of a water heater shall not be used as the temperature control for *tempered water*.

IPC SECTION 701

**IPC Section 701.10, 701.11 and 701.12; added to read as follows:*

701.10 Abandoned building sewers and private disposal systems. All abandoned building sewers and private sewer disposal systems shall be plugged or capped in an approved manner. All abandoned treatment tanks and seepage pits shall have the

removed and the remaining portion of the tank or excavation shall be filled immediately after connection to a public sewer system or after abandonment of a private sewage disposal system. The permittee shall be responsible for the filling of the tank.

701.11 Manufactured Home Parks.

1. Each manufactured home park shall be provided with a sewage disposal system that complies with all federal, state, and local laws. Septic tanks for the disposal of sewage shall not be permitted.

2. Each manufactured home stand shall be provided with a sewer riser pipe conforming to each of the following requirements:

   a. The pipe shall have a minimum diameter of four (4) inches.

   b. The pipe shall be located on each stand so that the sewer connection to the manufactured home drain outlet will approximate a vertical position.

   c. The pipe shall be plugged when no manufactured home occupies the space.

   d. Surface drainage shall be diverted away from the pipe.

701.12 Recreational Vehicle Parks. The following provisions shall apply to Recreational Vehicle Parks and Recreational Vehicle lots that occur in Manufactured Home Parks.

1. Each recreational vehicle park shall be provided with a sewage disposal system that complies with all federal, state, and local laws. Septic tanks for the disposal of sewage shall not be permitted.

2. Individual sewer connections shall conform to the following:

   a. If individual sewer connections are provided, they shall consist of at least a four-inch (4") diameter sewer riser pipe. A sewer riser pipe located at a lot shall be installed so that the sewer connection to the recreational vehicle drain outlet will be functional and sanitary.

   b. Sewer riser pipes shall be plugged when a recreational vehicle does not occupy the lot.

   c. Surface drainage shall be diverted away from the riser pipe.

3. Each recreational vehicle park shall contain waste disposal stations for the sole purpose of removing and disposing of wastes from recreational vehicle holding tanks in a clean, efficient and convenient manner. Except as provided in subsection (4),

a. Each waste disposal station shall consist of a drainage basin constructed of impervious material, containing a disposal hatch and self-closing cover, and related washing facilities. Such units shall be provided on the basis of one (1) for every one hundred (100) lots or fraction thereof.

b. Waste disposal stations shall be located a minimum of fifty (50) feet from any lot. They shall be blocked from view by a screening device.

c. The disposal hatch of each waste disposal station unit shall be connected to the park sewage disposal system. Facilities for washing holding tanks and the station area shall be connected to the park water supply system.

4. In lieu of or in addition to community waste disposal stations, a recreational vehicle park may provide waste disposal facilities at each lot. The design of such facilities shall comply with all applicable city codes.

IPC SECTION 708

**IPC Section 708.3.2; changed to read as follows:*

708.3.2 Building sewers. Building sewers shall be provided with cleanouts located not more than 100 feet (30 480 mm) apart measured from the upstream entrance of the cleanout. In lieu of cleanouts, for ~~For~~ building sewers 8 inches (203 mm) and larger, manholes ~~shall~~ may be ~~provided~~ installed and located not more than 200 feet (60 960 mm) from the junction of the *building drain* and *building sewer*, at each change in direction and at intervals of not more than 400 feet (122 m) apart. Manholes and manhole covers shall be of an *approved* type.

**IPC Section 708.3.4; changed to read as follows:*

708.3.4 Upper terminal ~~Base of stack~~. Each horizontal drain shall be provided with a cleanout at its upper terminal ~~A cleanout shall be provided at the base of each waste or soil stack~~.

Exception: Cleanouts may be omitted on a horizontal drain less that five (5) feet (1524 mm) in length unless such line is serving sinks or urinals.

IPC TABLE 710.1

**Table 710.1(1); change footnote "a" to read as follows:*

[a] The minimum size of any building drain serving a water closet shall be 3 inches. Not more than three (3) water closets shall be permitted on any 3 inch diameter horizontal drain or sewer.

**Table 710.1(2); change footnote "a" to read as follows:*

[a] Does not include branches of the building drain. Refer to Table 710.1(1). Not more than three (3) water closets shall be permitted on any 3 inch diameter horizontal branch or drain.

IPC SECTION 712

**IPC Section 712.5; added to read as follows:*

712.5 Dual Pump System. All sumps shall be automatically discharged and, when in any "public use" occupancy where the sump serves more than 10 fixture units, shall be provided with dual pumps or ejectors arranged to function independently in case of overload or mechanical failure. (For storm drainage, see Section 1113.)

IPC SECTION 714

**IPC Section 714.1; changed to read as follows:*

ENGINEERED ~~COMPUTERIZED~~ DRAINAGE DESIGN

714.1 Design of drainage system. The sizing, design and layout of the drainage system shall be permitted to be designed by *approved* ~~computer~~ design methods that are not in conflict with this code.

IPC SECTION 802

**IPC Section 802.4; change to read as follows:*

802.4 Standpipes. Standpipes shall be individually trapped. Standpipes shall extend a minimum of 18 inches (457 mm) and a maximum of 42 inches (1066 mm) above the trap weir. *Access* shall be provided to all standpipes and drains for rodding. Standpipes serving automatic clothes washers shall have their traps above the floor level. No standpipe shall be installed below the ground.

IPC SECTION 805

**Section 805; added to read as follows:*

SECTION 805
CONDENSATE WASTE

805.1 Condensate waste. When the condensate waste from air conditioning coils discharges by direct connection to a lavatory tailpiece or to an approved accessible inlet on a bathtub overflow, the connection shall be located in the area controlled by the same person controlling the air-conditioned space.

IPC SECTION 904

**IPC Section 904.1; changed to read as follows:*

904.1 Roof extension. All open vent pipes that extend through a roof shall be terminated at least six (6) inches (152 mm) above the roof, except that where a roof is to be used for any purpose other than weather protection, the vent extensions shall be run at least 7 feet (2134 mm) above the roof.

IPC SECTION 906

**IPC Section 906.1; delete the exception.*

IPC SECTION 912

**IPC Section 912.1; changed to read as follows:*

912.1 Type of fixture. A combination drain and vent system shall not serve fixtures other than floor drains, standpipes, ~~sinks, lavatories~~ and ~~drinking fountains~~ indirect waste receptors. Combination drain and vent systems shall not receive the discharge of a food waste grinder or clinical sink.

IPC SECTION 1002

**IPC Section 1002.10; delete.*

IPC SECTION 1003

**IPC Section 1003.1; changed to read as follows:*

1003.1 Where required. Interceptors and separators shall be provided, as required by applicable local provisions, to prevent the discharge of oil, grease, sand and other substances harmful or hazardous to the building drainage system, the *public sewer*, the private sewage disposal system or the sewage treatment plant or processes. In the absence of local provisions, they shall be provided as required in this chapter.

**IPC Section 1003.3.2; changed to read as follows:*

1003.3.2 Food waste grinders. Where food waste grinders connect to grease interceptors, a solids interceptor shall separate the discharge as an integral design of the grease interceptor when required by applicable local provisions, or before connecting to the grease interceptor. Solids interceptors and grease interceptors shall be sized and rated for the discharge of the food waste grinder. Emulsifiers, chemicals, enzymes and bacteria shall not discharge into the food waste grinder.

**IPC Section 1003.3.4.1; changed to read as follows:*

1003.3.4.1 Grease interceptor capacity. Grease interceptors shall have the grease retention capacity as required by applicable local provisions. In the absence of local provisions, the capacity shall be as indicated in Table 1003.3.4.1 for the flow-through rates indicated.

IPC Section 1003.4; change the exception to read as follows:

Exception: For oil separators in elevator pits, see Section 315. ~~An oil separator is not required in hydraulic elevator pits where an *approved* alarm system is installed.~~

IPC SECTION 1101

**IPC Section 1101.2.1; added to read as follows:*

1101.2.1 Over Private Property. Drainage from the roofs of any commercial building or structure shall be contained within the property lines and shall not be allowed or caused to drain to adjacent properties. Drainage from the downspout of any commercial building or structure shall be connected to lateral storm sewer piping or, in the alternative, water therefrom shall be otherwise contained and directed in accordance with accepted engineering practice as approved by the Director of

Transportation and Public Works.

**IPC Section 1101.8; changed to read as follows:*

1101.8 Cleanouts required. Cleanouts shall be installed in the storm drainage system and shall comply with the provisions of this code for sanitary drainage pipe cleanouts.

Exceptions: 1. Subsurface drainage system.

2. Cleanouts and manholes as required by Sections 708.3.2 and 708.3.3 are not required when the building storm drainage system is protected from potential water backup from the yard lines by one of the following methods:

a. The building storm drainage systems connects to the yard storm drainage piping through an air gap; or,
b. there is some form of relief such as a parking lot inlet or curb inlet in which blocked storm water can discharge before backing up in the building storm drainage system.

IPC SECTION 1106

**IPC Section 1106.1; changed to read as follows:*

1106.1 General. The size of the vertical conductors and leaders, building storm drains, building storm sewers, and any horizontal branches of such drains or sewers shall be based on six (6) inches per hour ~~the 100-year hourly~~ rainfall rate ~~indicated in Figure 1106.1 or on other rainfall rates determined from *approved* local weather data~~.

IPC CHAPTER 12

**IPC Section 1202.1; delete exception #2.*

(c) The remaining sections of the 2009 *International Fuel Gas Code* are hereby amended as follows:

IFGC SECTION 202

**IFGC Section 202; the definitions of "Code Official" is changed and new definitions are added to read as follows:*

BUILDING CODE. Building Code shall mean the *International Building Code* as adopted by this jurisdiction.

CHANGE OF OCCUPANCY. A change in the purpose or level of activity within a building that involves a change in application of the requirements of this code. The definition shall also apply to the usage of the surrounding site and access to and from the building, structure or site, as necessary to achieve the purpose of this code, and to obtain compliance with other codes and ordinances of this jurisdiction.

CODE OFFICIAL. The officer or other designated authority charged with the administration and enforcement of this code, or a duly authorized representative. For the purpose of this code, the Code Official shall be the Building Official, and his regularly authorized deputy shall be the Chief Plumbing Inspector.

ELECTRICAL CODE. Electrical Code shall mean the *National Electrical Code* as adopted by this jurisdiction. For the purpose of this code, all references to NFPA 70 and the *ICC Electrical Code* shall be assumed to mean the Electrical Code as defined herein.

ENERGY CODE. Energy Code shall mean the *International Energy Code* as adopted by this jurisdiction.

FIRE PREVENTION CODE (FIRE CODE). Fire Prevention Code, or Fire Code, shall mean the *International Fire Code* as adopted by this jurisdiction.

FUEL GAS CODE. Fuel Gas code shall mean the *International Fuel Gas Code* as adopted by this jurisdiction and shall be considered as part of the Plumbing Code. (See Plumbing Code.)

MECHANICAL CODE. Mechanical Code shall mean the *International Mechanical Code* as adopted by this jurisdiction.

PLUMBING.
For the purpose of using the *International Plumbing Code*, as adopted, shall mean:

The practice, materials and fixtures utilized in the installation, maintenance, extension and alteration of all piping, fixtures, plumbing appliances

and plumbing appurtenances, within or adjacent to any structure, in connection with sanitary drainage or storm drainage facilities; venting systems, and public or private water supply systems.

For the purpose of complying with the Texas State Plumbing License Law, shall mean:

All piping, fixtures, appurtenances, and appliances, including disposal systems, drain or waste pipes, or any combination of these that:

supply, recirculate, drain, or eliminate water, gas, medical gasses and vacuum, liquids, and sewage for all personal or domestic purposes in and about buildings where persons live, work, or assemble; connect the building on its outside with the source of water, gas, or other liquid supply, or combinations of these, on the premises, or the water main on public property; and carry waste water or sewage from or within a building to the sewer service lateral on public property or the disposal or septic terminal that holds private or domestic sewage.

The installation, repair, service, maintenance, alteration, or renovation of all piping, fixtures, appurtenances, and appliances on premises where persons live, work, or assemble that supply gas, medical gasses and vacuum, water, liquids, or any combination of these, or dispose of waste water or sewage.

PLUMBING CODE. Plumbing Code shall mean the *International Plumbing Code* and the *International Fuel Gas Code* as adopted by this jurisdiction. The term "Plumbing Code" applies to both codes as one combined code.

PLUMBING SYSTEM.
For the purpose of using the *International Plumbing Code*, as adopted, shall mean:

Includes the water supply and distribution pipes; plumbing fixtures and traps; water-treating or water-using equipment; soil, waste and vent pipes; and sanitary and storm sewers and building drains, in addition to their respective connections, devices and appurtenances within a structure or premise.

RESIDENDIAL CODE. Residential Code shall mean the *International Residential Code* as adopted by this jurisdiction.

IFGC SECTION 301

**IFGC Section 301.15.1; added to read as follows:*

301.15.1 Other pipes, ducts or electrical wiring. See Building Code, Sections 3004.4 and 3006.6 and the following:

(**ASME A17.1 – Section 2.8.2.2**) Only such electrical wiring, raceways, cables, coaxial wiring, and antennas used directly in connection with the elevator, including wiring for signals, for communication with the car, for lighting, heating, air conditioning,

and ventilating the car, for fire detecting systems, for pit sump pumps, and for heating and lighting the hoistway and/or the machinery space, machine room, control space, or control room shall be permitted to be installed inside the hoistway, machinery space, machine room, control space, or control room.

(**ASME A17.1 – Section 2.8.3.4**) Other pipes or ducts conveying gases, vapors, or liquid and not used in connection with the operation of the elevator shall not be installed in any hoistway, machinery space, machine room, control space or control room.

**IFGC Section 301.16 and 301.17; added to read as follows:*

301.16 Manufactured Home Parks.

1. At each lot provided with piped gas the outlet shall be equipped with an approved cutoff when not in use so as to prevent accidental discharge of gas.

2. Liquefied petroleum gas systems may be installed only if an available natural gas system is more than one thousand (1,000) feet from the manufactured home park.

301.17 Recreational Vehicle Parks.

Each recreational vehicle park lot provided with piped gas shall have an approved manual shutoff valve installed upstream of the gas outlet. The outlet shall be equipped with an approved cutoff to prevent accidental discharge of gas when the outlet is not in use.

IFGC SECTION 302

**IFGC Section 302.3; changed to read as follows:*

302.3 Cutting, notching and boring in wood framing. When permitted by the Building Code, the ~~The~~ cutting, notching and boring of wood framing members shall comply with Sections 302.3.1 through 302.3.4.

IFGC SECTION 303

**IFGC Section 303.1; add a second paragraph to read as follows:*

Access to *equipment* and appliances shall be provided through areas under the control of the tenant, room or dwelling unit served, or provided in common areas accessible without going through private tenant spaces, rooms or dwelling units. The location shall not be such that permission from one occupant must be obtained before another occupant can provide service to their equipment or appliances.

IFGC SECTION 304

**IFGC Section 304.10; changed to read as follows:*

304.10 Louvers and grilles. The required size of openings for combustion, ventilation and dilution air shall be based on the net free area of each opening. Where the free area through . . . [*bulk of section unchanged*] . . . known, it shall be assumed that wood louvers will have 25-percent free area and metal louvers and grilles will have ~~75~~ 50-percent free area. Screens shall have . . . [*remainder of section unchanged*].

**IFGC Section 304.11, item #8; changed to read as follows:*

8. Combustion air intake openings located on the exterior of a building shall have the lowest side of such openings located not less than 12 inches (305 mm) vertically from the adjoining finished ground level or the manufacturer's recommendation, whichever is more restrictive.

IFGC SECTION 305

**IFGC Section 305.5; delete.*

IFGC SECTION 306

**IFGC Section 306.3; changed to read as follows:*

306.3 Appliances in attics. Attics containing appliances shall be provided . . . *{bulk of paragraph unchanged}* . . . side of the *appliance*. The clear *access* opening dimensions shall be a minimum of 20 inches by 30 inches (508 mm by 762 mm), ~~and~~ or larger where such dimensions are not large enough to allow removal of the largest *appliance*. As a minimum, access to the attic space of residential uses shall be provided by one of the following:

1. A permanent stair.
2. A pull down stair.
3. An access door from an upper floor level.
4. An access panel, only when the equipment can be reached from the panel opening and only with prior approval of the code official.

Exceptions:

1. The passageway and level service space are not required where the *appliance* is capable of being serviced and removed through the required opening.

2. Where the passageway is unobstructed and not less than 6 feet (1829 mm) high and 22 inches (559 mm) wide for its entire length, the passageway shall be not greater than 50 feet (15 250 mm) in length.

Solid flooring as specified for the passageway of this section shall be flooring that complies with the provisions as required for a floor or shall not be less than one layer of ¾" plywood.

Water heaters shall not be installed in residential attics.

Exception: Tankless water heaters.

**IFGC Section 306.3.1; add a sentence to read as follows:*

Low voltage wiring of 50 Volts or less shall be installed in a manner to prevent physical damage.

**IFGC Section 306.4; amend exception #2 and add a paragraph after the exceptions to read as follows:*

2. Where the passageway is unobstructed and not less than 6 feet (1829 mm) high and 22 inches (559 mm) wide for its entire length, the passageway shall be not greater than 50 feet (15 250 mm) in length.

Under floor spaces that are more than 30 inches (762 mm) below the access level shall be provided with a permanent ladder as detailed in Section 306.5.

**IFGC Section 306.4.1; add a sentence to read as follows:*

Low voltage wiring of 50 Volts or less shall be installed in a manner to prevent physical damage.

**IFGC Section 306.5; changed to read as follows:*

306.5 Equipment and appliances on roofs or elevated structures. Where *equipment* requiring *access* and appliances are installed on roofs or elevated structures at an aggregate height exceeding 16 feet (4877 mm), such *access* shall be provided by a permanent *approved* means of *access*.~~, the extent of which shall be from~~ Permanent exterior ladders providing roof *access* need not extend closer than 12 feet (3658 mm) to the finish grade or floor level below and shall extend to the *equipment* and appliances' level service space. Such *access* shall . . . *{bulk of section to read the same}*. . . height shall be measured to the top of the parapet wall.

Where an equipment or appliance has a serviceable area located at a height exceeding 16 feet (4877 mm) above the access level, a permanent approved means of access and a

ladder need not extend closer than 8 feet (2438 mm) to the access level below.

{Remainder of section unchanged}

**IFGC Section 306.5.1.1; added to read as follows:*

306.5.1.1 Catwalk. On roofs having slopes greater than 4 in 12, a catwalk at least 24 inches in width with substantial cleats spaced not more than 16 inches apart shall be provided from the roof access to the working platform at the appliance.

**IFGC Section 306.5.2; add a sentence to read as follows:*

Low voltage wiring of 50 Volts or less shall be installed in a manner to prevent physical damage.

**IFGC Section 306.7; added to read as follows:*

306.7 Water heaters above ground or floor. When the mezzanine or platform in which a water heater exceeding a capacity of 10 gallons is installed is more than eight (8) feet (2438 mm) above the ground or floor level, it shall be made accessible by a stairway or permanent ladder fastened to the building.

Exception: A maximum 10 gallon water heater (or larger with approval) is capable of being accessed through a lay-in ceiling and is installed not more than ten (10) feet (3049 mm) above the ground or floor level and may be reached with a portable ladder.

306.7.1 Whenever the mezzanine or platform is not adequately lighted or access to a receptacle outlet is not obtainable from the main level, lighting and a receptacle outlet shall be provided in accordance with Section 306.3.1.

**IFGC Section 307.3; change to read and add a second paragraph to read as follows:*

307.3 Drain pipe materials and sizes. Components of the condensate disposal system shall be cast iron, galvanized steel, copper, cross-linked polyethylene, ~~polybutylene~~, polyethylene, ABS, CPVC or PVC (schedule 80 PVC when exposed to ultra violet light) pipe or tubing. All components shall be selected for the pressure, ~~and~~ temperature and exposure rating of the installation. Joints and connections shall be made in accordance with the applicable provisions of Chapter 7 of the *International Plumbing Code* relative to the material type. Condensate waste and drain line size shall be not less than the discharge size of the pan but not less than ¾-inch (19 mm) internal diameter and shall not . . . *{bulk of paragraph unchanged}* . . . in accordance with ~~an *approved* method~~ Table 314.2.2 of the *International Plumbing Code*. All horizontal sections of drain

IFGC SECTION 401

**IFGC Section 401.5; add a second paragraph to read as follows:*

Both ends of each section of medium pressure corrugated stainless steel tubing (CSST) shall identify its operating gas pressure with an approved tag. The tags are to be composed of aluminum or stainless steel and the following wording shall be stamped into the tag:

"WARNING
1/2 to 5 psi gas pressure
Do Not Remove"

IFGC SECTION 402

**IFGC Section 402.3; add an exception to read as follows:*

Exception: Corrugated stainless steel tubing (CSST) shall be a minimum of 1/2" (18 EHD).

IFGC SECTION 403

**IFGC Section 403.4.3; changed to read as follows:*

403.4.3 Copper and brass. Copper and brass pipe shall not be used for natural gas without approval from the Construction and Fire Prevention Board. When permitted, copper and brass pipe shall not be used if the gas contains more than an average of 0.3 grains of hydrogen sulfide per 100 standard cubic feet of gas (0.7 milligrams per 100 liters). Threaded copper, brass and aluminum-alloy pipe shall not be used with gases corrosive to such materials.

**IFGC Section 403.5.2; changed to read as follows:*

403.5.2 Copper and brass tubing. Copper tubing shall comply with Standard Type K or L of ASTM B88 or ASTM B280.

Copper and brass tubing shall not be used for natural gas without approval from the Construction and Fire Prevention Board. When permitted, copper and brass tubing shall not be used if the gas contains more than an average of 0.3 grains of hydrogen sulfide per 100 standard cubic feet of gas (0.7 milligrams per 100 liters).

IFGC SECTION 404

**IFGC Section 404.5; add a second paragraph to read as follows:*

Piping other than black or galvanized steel shall not be installed within 1 ½ inches of the roof deck where roofing nails can penetrate unless protected by shield plates.

**IFGC Section 404.7; changed to read as follows:*

404.7 Above-ground outdoor piping. All aboveground *piping* installed outdoors shall be elevated . . . *{bulk of section unchanged}* . . . sleeve shall be sealed.

**IFGC Section 404.10; changed to read as follows:*

404.10 Minimum burial depth. Underground piping systems shall be installed a minimum depth of ~~12~~ 18 inches (~~305~~ 458 mm) below grade~~, except as provided for in Section 404.10.1~~.

**IFGC Section 404.10.1; delete.*

IFGC SECTION 406

**IFGC Section 406.1.3; delete.*

**IFGC Section 406.4, 406.4.1 and 406.4.2; changed to read as follows:*

406.4 Test pressure measurement. Test pressure shall be measured with a diaphragm gauge ~~manometer or with a pressure-measuring device~~ designed and calibrated to read, record or indicate a pressure loss caused by leakage during the pressure test period. The source of pressure shall be isolated before the pressure tests are made. ~~Mechanical gauges used to measure test pressures shall have a range such that the highest end of the scale is not greater than five times the test pressure.~~ Gauges shall be calibrated per manufacturer's recommendation or at a minimum of one (1) time per year, to insure accuracy.

406.4.1 Test pressure. {*no change*}.

406.4.2 Test duration. Test duration shall be held for a length of time satisfactory to the code official, but not less than 15 minutes. ~~not less than ½ hour for each 500 cubic feet (14 m^3) of pipe volume or fraction thereof. When testing a system having a volume less than 10 cubic feet (0.28 m^3) or a system in a single-family dwelling, the test duration shall be not less than 10 minutes. The duration of the test shall not be required to exceed 24 hours.~~

**IFGC Section 406.4.3; added to read as follows:*

406.4.3 Mixed gas piping systems. Welded and non-welded gas piping systems shall not be mixed without the installation of cut-off devices so that each system can be isolated and tested separately as required in this section.

Existing mixed piping systems lawfully in existence at the time of the adoption of this code may remain. Any retesting of such a mixed system shall be at the lower testing pressure required for the piping involved. Such a system shall be so labeled with the operating pressure in a manner as required by the Code Official.

**IRC Sections 406.7 through 406.7.4; deleted and replaced to read as follows:*

406.7 (G2417.7) Purging requirements. The purging of piping shall be in accordance with Sections 406.7.1 through 406.7.3.

406.7.1 (G2417.7.1) Piping systems required to be purged outdoors. The purging of piping systems shall be in accordance with the provisions of Sections 406.7.1.1 through 406.7.1.4 where the piping system meets either of the following:

1. The design operating gas pressure is greater than 2 psig.
2. The piping being purged contains one or more sections of pipe or tubing greater than 2 inches in nominal size and exceeding the lengths in Table 406.7.1.1.

406.7.1.1 (G2417.7.1.1) Removal from service. Where existing gas piping is opened, the section that is opened shall be isolated from the gas supply and the line pressure vented in accordance with Section 406.7.1.3. Where gas piping meeting the criteria of Table 406.7.1.1 is removed from service, the residual fuel gas in the piping shall be displaced with an inert gas.

Table 406.7.1.1 (G2417.7.1.1)
Size and Length of Piping

Nominal Pipe Size (inches)	Length of Piping (feet)
2 ½	> 50
3	> 30
4	> 15
6	> 10
8 or larger	Any length

For SI units: 1 inch = 25.4 mm; 1 ft = 304.8 mm.

406.7.1.2 (G2417.7.1.2) Placing in operation. Where gas piping containing air and meeting the criteria of Table 406.7.1.1 is placed in operation, the air in the piping shall first

be displaced with an inert gas. The inert gas shall then be displaced with fuel gas in accordance with Section 406.7.1.3.

406.7.1.3 (G2417.7.1.3) Outdoor discharge of purged gases. The open end of a piping system being pressured vented or purged shall discharge directly to an outdoor location. Purging operations shall comply with all of the following requirements:

1. The point of discharge shall be controlled with a shutoff valve.
2. The point of discharge shall be located at least 10 feet from sources of ignition, at least 10 feet from building openings and at least 25 feet from mechanical air intake openings.
3. During discharge, the open point of discharge shall be continuously attended and monitored with a combustible gas indicator that complies with Section 406.7.1.4.
4. Purging operations introducing fuel gas shall be stopped when 90% fuel gas by volume is detected within the pipe.
5. Persons not involved in the purging operations shall be evacuated from all areas within 10 feet of the point of discharge.

406.7.1.4 (G2417.7.1.4) Combustible gas indicator. The combustible gas indicator used during purging operations shall be listed and shall be calibrated in accordance with the manufacturer's instructions and recommended schedule. The combustible gas indicator used for pipe discharge monitoring shall numerically display a volume scale from 0% to 100% with a resolution of not greater than 1% increments.

406.7.2 (G2417.7.2) Piping systems allowed to be purged indoors or outdoors. The purging of piping systems shall be in accordance with the provisions of Section 406.7.2.1 where the piping system meets both of the following:

1. The design operating gas pressure is 2 psig or less.
2. The piping being purged is constructed entirely from pipe or tubing of 2 inch nominal size or smaller, or larger size pipe or tubing with lengths shorter than specified in Table 406.7.1.1.

406.7.2.1 (G2417.7.2.1) Purging procedure. The piping system shall be purged in accordance with one or more of the following:

1. The piping shall be purged with fuel gas and shall discharge to the outdoors.
2. The piping shall be purged with fuel gas and shall discharge to the indoors or outdoors through an appliance burner not located in a combustion chamber. Such burner shall be provided with a continuous source of ignition.
3. The piping shall be purged with fuel gas and shall discharge to the indoors or outdoors through a burner that has a continuous source of ignition and that is designed for such purpose.
4. The piping shall be purged with fuel gas that is discharged to the indoors or outdoors, and the point of discharge shall be monitored with a listed combustible gas detector in accordance with 406.7.2.2. Purging shall be stopped when fuel gas is detected.

5. The piping shall be purged by the gas supplier in accordance with written procedures.

406.7.2.2 (G2417.7.2.2) Combustible gas detector. The combustible gas detector used during purging operations shall be listed and shall be calibrated or tested in accordance with the manufacturer's instructions and recommended schedule. The combustible gas detector used for pipe discharge monitoring shall indicate the presence of fuel gas.

406.7.3 (G2417.7.3) Purging appliances and equipment. After the piping system has been placed in operation, appliances and equipment shall be purged before being placed into operation.

IFGC SECTION 409

**IFGC Section 409.1.4; added to read as follows:*

409.1.4 Valves in CSST installations. Shutoff valves installed with corrugated stainless steel (CSST) piping systems shall be supported with an *approved* termination fitting, or equivalent support, suitable for the size of the valves, of adequate strength and quality, and located at intervals so as to prevent or damp out excessive vibration but in no case greater than 12-inches from the center of the valve. Supports shall be installed so as not to interfere with the free expansion and contraction of the system's piping, fittings, and valves between anchors. All valves and supports shall be designed and installed so they will not be disengaged by movement of the supporting piping.

IFGC SECTION 410

**IFGC Section 410.1; add a second paragraph and exception to read as follows:*

Access to regulators shall comply with the requirements for access to appliances as specified in Section 306.

Exception: A passageway or level service space is not required when the regulator is capable of being serviced and removed through the required attic opening.

IFGC SECTION 614

**IFGC Section 614.6.1; add a sentence to read as follows:*

The size of duct shall not be reduced along its developed length nor at the point of termination.

**IFGC Section 614.6.6; changed to read as follows:*

614.6.6 Length identification. Where the exhaust duct is concealed within the building construction and the length is approved to exceed the maximum length specified in Section 614.6.5.1, the equivalent length of the exhaust duct shall be identified on a permanent label or tag. The label or tag shall be located within 6 feet (1829 mm) of the exhaust duct connection.

IFGC SECTION 621

**IFGC Section 621.2; changed to read as follows:*

621.2 Prohibited use. One or more unvented room heaters shall not be used as the sole source of comfort heating in a *dwelling unit*.

Exception: Existing approved unvented heaters may continue to be used in dwelling units, in accordance with the code provisions in effect when installed, when approved by the Code Official unless an unsafe condition is determined to exist as described in Section 108.7.

IFGC SECTION 624

**IFGC Section 624.1.1; changed to read as follows:*

624.1.1 Installation requirements. The requirements for water heaters relative to *access*, sizing, relief valves, drain pans and scald protection shall be in accordance with the *International Plumbing Code*. Water heaters, other than tankless water heaters, shall not be installed in residential attics.

IPC Appendix H; added to read as follows:

APPENDIX H
WATER RECOVERY

Division I – All

H101 General. This appendix is designed to provide safe usage of water that is acquired through a Re-use source and/or through Rainwater Harvesting methods. For the purpose of this appendix, Water Recovery shall mean water that is acquired through a source other than the local potable municipal water supply, is saved from loss and made available for use.

Since water acquired from sources other than a potable municipal water supply has inherent limitations of quality and usability, installation requirements are necessary to protect the end user and prevent the possible contamination of potable water sources that are also present on the property. As such, the requirements as specified in this appendix shall be applicable as follows:

a. Rainwater Harvesting Systems, Division II;
b. Reclaimed Water Systems, Division III;
c. Gray Water Systems, Division IV;
d. Industrial Reclaimed Water Systems, Division V.

There may be other methods of water recovery, or water sources available or newly created, that are not specifically addressed in this appendix. Any system not specifically covered in this appendix shall be subject to approval of the Building Official.

H102 Scope. This appendix shall apply to the installation, construction, alteration, repair and maintenance of any Water Recovery System. The provisions listed in this appendix are only authorized for the use of non-potable water. However, all systems shall comply with the same plumbing requirements as a potable water system.

The provisions of this code for "Plumbing" and "Plumbing Systems" shall be applicable to those systems described in this appendix, except as amended by this appendix. Although some provisions of this appendix are applicable to potable systems, when any use is intended to be for potable water, the design and purification system must be separately approved by the Building Official.

> **Exception:** This appendix shall not apply to water whose source is from a well. The other plumbing provisions of this code will still apply to a well system. If such well water is combined with a Water Recovery System, then the system after the combination shall comply with this appendix.

H103 Authority having Jurisdiction. The provisions of this appendix shall be under

the authority of the Building Official except where the Director of the Water Department is specifically listed as the authority or as shared authority.

H104 State Law. Various provisions of this appendix are also referenced under State Law along with other sources of recommended installation methods. Compliance with State Law is the responsibility of the producer, provider and user of such installations. It is recommended that the following reference material be reviewed for guidance:

Harvesting, Storing, and Treating Rainwater for Domestic Indoor Use
http://www.tceq.state.tx.us/files/gi-366.pdf_4231966.pdf

The Texas Manual on Rainwater Harvesting
http://www.twdb.state.tx.us/publications/reports/RainwaterHarvestingManual_3rdedition.pdf

Texas Rainwater Harvesting Evaluation Committee Final Report
http://www.twdb.state.tx.us/iwt/rainwater/docs/RainwaterCommitteeFinalReport.pdf

Rainwater Harvesting – Frequently Asked Questions
http://www.twdb.state.tx.us/iwt/rainwater/faq.html

Water Reuse – Frequently Asked Questions
http://www.twdb.state.tx.us/iwt/reuse/faq.html

State of Texas Administrative Code – Title 30, Environmental Quality
Chapter 210 – Use of Reclaimed Water
http://info.sos.state.tx.us/pls/pub/readtac$ext.ViewTAC?tac_view=4&ti=30&pt=1&ch=210

State of Texas Administrative Code – Title 30, Environmental Quality
Chapter 210 – Use of Graywater Systems
http://info.sos.state.tx.us/pls/pub/readtac$ext.ViewTAC?tac_view=5&ti=30&pt=1&ch=210&sch=F&rl=Y

State of Texas Administrative Code – Title 30, Environmental Quality
Chapter 210 – Rules and Regulations for Public Water Systems
http://info.sos.state.tx.us/pls/pub/readtac$ext.ViewTAC?tac_view=4&ti=30&pt=1&ch=290

No provision of this appendix shall be construed as granting authority to violate nor assuring compliance with State Law. The provisions of this appendix and this code may be more stringent that those covered under state law.

H105 Color Coding. Color coding requirements are specified in various sections of this appendix to identify piping used for water recovery systems when entering a building.

Such color coding is prohibited from use on any other plumbing system.

Exception: When required by the Water Department, such color coding may also be required for exterior piping, such as irrigation systems that use water from systems covered in this appendix.

Division II – Rainwater Harvesting

H201 Scope. The provisions of this Division shall apply to the installation, construction, alteration, repair and maintenance of Rainwater Harvesting Systems. Provisions listed herein that are identified as "Recommended Practice" or "Informational" in italic text shall not be mandatory. If collected rain water is combined with another water recovery source or domestic water, the most restrictive provisions shall apply.

> **Exception:** Any piping, joints and equipment used for irrigation systems that occur after the pump shall be subject to any applicable provisions in the Water Department Irrigation regulations. An irrigation and/or backflow permit may be required by the Water Department.

H202 Definitions. All definitions listed in this section are intended to be in agreement with the State of Texas laws. Any definition not listed shall be as defined in this code, other city codes or State Law.

CATCHMENT SURFACE is the collection surface from which rainfall runs off.; e.g. roof top, wall, surface paving, etc.

DEBRIS is used to describe any visible contaminant including leaves and twigs, dust and dirt, bird and animal droppings, insects, and other visible material.

> *Informational: Although debris obviously reduces the aesthetic quality of the water, it can also pose unseen chemical and biological health threats. For example, leaves and dust can contain unseen chemical contaminants such as herbicides and pesticides. Similarly, bird and animal dropping can contain microscopic parasites, bacteria, and viruses.*
>
> *Other contaminants can include:*
>
> *Volatile Organic Chemicals (VOC) can be introduced when rainwater comes into contact with materials containing refined organic products including plastics, glues, and solvents, as well as gasoline, greases, and oils.*
>
> *Synthetic Organic Chemicals (SOCs) are chemicals that are typically found in pesticides, herbicides, and similar man-made products.*
>
> *Minerals are inorganic materials found naturally in the environment including inorganic salts (such as calcium carbonate, sodium bicarbonate, magnesium sulfate, and sodium chloride).*
>
> *Metals include lead, arsenic, copper, iron, and manganese.*

NONPOTABLE WATER is water that may have received some treatment but not enough to make it safe for potable use. Nonpotable water can be used for watering lawns

and gardens, washing clothes, or flushing toilets, but should not be used for any purpose that might result in the ingestion of the water or its contact with the skin.

POTABLE WATER is water that is used for preparing food or beverages for human consumption, for washing dishes and utensils that are used to prepare or consume food or beverages, for bathing, or for any other purpose that might result in the ingestion of water or its contact with the skin.

RAINWATER HARVESTING is the capture and storage of rainwater for purposes such as landscape irrigation, potable and non-potable indoor uses, and storm water abatement.

Informational: Rainwater harvesting can be classified into two broad categories: land-based and roof-based. Land-based rainwater harvesting occurs when rainwater runoff from the land is collected in ponds and small impoundments before it reaches a river or stream. Roof-based harvesting involves collecting the rainwater that falls on a roof before the water reaches the ground. Both systems are subject to contamination and must be properly treated before it can be used.

H203 Permits required. No special permit(s) is required by this department for a rainwater system beyond the permits already required by this code and other city codes. Examples, but not an all inclusive list, of possible permits are as follows:

a. Rainwater collection system that conveys water to an above ground tank, such as a rain barrel, for gravity flow (hose flow) irrigation distribution:
    1. no permits are required. However, the following provisions are mandatory:
        i. mosquito protection
        ii. the tank (the barrel) must be in compliance with the tank provisions listed herein to prevent algae growth, provide overflow protection, etc.

b. Rainwater collection system that conveys water to an above or below ground tank for pressurized distribution, such as through a pump:

    Permits are required for:
    1. the pump and its electrical service;
    2. all piping, joints and equipment after the pump when the system enters a building or structure. The entire system starting from the catchment surface is subject to compliance and inspection;
    3. other than the pump, as listed above, no permits are required by this department when the system is for irrigation only and does not enter a building or structure. However, an irrigation and/or backflow permit may be required by the Water Department. The following provisions are mandatory:
        i. mosquito protection

ii. the tank must be in compliance with the tank provisions listed herein to prevent algae growth, provide overflow protection, etc.

c. Rainwater collection system in which the rainwater is combined with another water recovery source or domestic water:
    1. the most restrictive permit requirements shall be applicable, and the entire system starting from the catchment surface is subject to compliance and inspection.

d. Any piping, joints and equipment used for irrigation systems that occur after the pump shall be subject to any applicable provisions in the Water Department Irrigation regulations.

When a permit is required through this department, even if just for the pump, plans and diagrams must be submitted showing compliance with the provisions of this appendix.

Exception: Plans need not be provided to this department for any portion of the irrigation piping that occurs after the pump.

H204 System Limitations/Restrictions.

H204.1 Allowable Uses. The provisions of this division are designed only for the non-potable use of rain water. Although some provisions listed herein are applicable to potable systems, when any use is intended to be for potable water, the design and purification system must be separately approved by the Building Official.

Non-potable uses include irrigation, water closets (toilets), urinals, washing clothes, and industrial uses.

Informational: In planning a rainwater collection and storage system:

a. The catchment and storage facilities must be designed so that they reduce potential sources of contamination.

b. The catchment surface and storage tanks should be large enough to capture and store enough rainwater to last until the next time it rains. Otherwise, you will need to identify a supplemental source of water.

Fort Worth, Texas has an average of 35 inches of rainfall per year. A 2,000 sq.ft. roof can provide about 35,000 gallons of water annually. There is an average of 55 days between rainfall periods. If storage capacity is not large enough to capture the maximum water at each rainfall event, the overflow will be lost and realization of the full 35,000 gallon potential will not be achieved.

H204.2 Connection to Potable Water Systems. The rainwater system shall have no connection to any potable water system, except as approved by the Water Department. When the rainwater system tank is supplemented with a potable water

source, such connection shall be made with an air gap. Exposed piping shall be resistant to damage from UV rays and must have adequate freeze protection.

Public water system customers that also have rainwater harvesting systems must install a reduced pressure zone (RPZ) backflow preventer at the service meter.

Exception: A reduced pressure zone backflow preventer is not required for the gravity fed (rain barrel) irrigation system where no cross-connection to the potable supply exists.

H204.3 Components. Regardless of the complexity of the system, the rainwater harvesting system comprises six basic components:

a. Catchment surface: the collection surface from which rainfall runs off.
b. Gutters and downspouts: channel water from the roof to the tank.
c. Leaf screens, first-flush diverters, and roof washers: components which remove debris and dust from the captured rainwater before it goes to the tank.
d. One or more storage tanks, also called cisterns.
e. Delivery system: gravity-fed or pumped to the end use.
f. Treatment/purification: filters and other methods to prevent particles from clogging, contaminating or damaging equipment.

H204.3.1 Catchment surface. (*This subsection is Informational only*)

a. Roofs with copper flashings can cause discoloration of porcelain fixtures.
b. Clay and concrete tiles may contribute to as much as a 10% loss of water due to texture, inefficient flow, or evaporation.
c. Due to leaching of toxins, composite shingles are not appropriate for potable systems, but can be used to collect water for irrigation. Composite roofs have an approximated 10% loss due to inefficient flow or evaporation.
d. Water harvested using wood shingle, tar, and gravel roofing materials is suitable only for irrigation due to leaching of compounds.
e. Slate's smoothness makes it ideal for a catchment surface for portable use, assuming no toxic sealant is used.

H204.3.2 Gutters and downspouts. (*This subsection is Informational only*)

a. For potable water systems, lead cannot be used as gutter solder.
b. Copper can cause discoloration of porcelain fixtures.

H204.3.3 Leaf Screens. Leaf screens are required to prevent larger debris from entering the system. Debris can fill holding tanks, block piping and clog or damage pumps, irrigation emitters and plumbing equipment. Leaf screens come in many forms including:

a. Leaf guards, usually ¼" mesh screens in wire frames that fit along the length of the gutter.

b. Funnel-type downspout filter, made of PVC or galvanized steel fitted with a stainless steel or brass screen.
c. Strainer baskets, spherical cage-like strainers that slip into the drop outlet of the downspout.
d. A cylinder of rolled screen inserted into the drop outlet.
e. Filter sock of nylon mesh can be installed on the PVC pipe at the tank inflow.

H204.3.4 First-Flush Diverters. First-flush diverters are required. A roof can be a natural collection surface for dust, leaves, blooms, twigs, insect bodies, animal feces, pesticides, and other airborne residues. The first-flush diverter routes the first flow of water from the catchment surface away from the storage tank. The first-flush diverter gives the system a chance to rid itself of the smaller contaminants that are not stopped by the leaf screens, such as dust, pollen, and bird and rodent feces.

Informational: The first-flush diverters should be capable of diverting at least 10 gallons per 1,000 square feet of collection (roof) area. Diverters need to be emptied after each rain event.

H204.3.5 Roof Washers. The roof washer is required for systems to be used as potable water. For irrigation systems using drip irrigation, installation is recommended to prevent clogging of the emitters.

H204.3.6 Storage Tanks. A gallon of water weighs 8.34 pounds. (50 gallons weighs 417 pounds) Storage tanks, their foundation and their installation method must be capable of holding the imposed weight. Also, the water and its clarity may be affected by exposure to sunlight and the tank material, lining, or any paint that might be used.

Tank water is subject to algae growth and mosquito breeding. Algae can affect the clarity and odor of the water. Mosquito breeding is a health hazard.

The following provisions are required.

a. Storage tanks must be opaque, either upon purchase or painted later, to inhibit algae growth.
b. For potable systems, storage tanks must never have been used to store toxic materials.
c. Tanks must be covered and vents screened to discourage mosquito breeding.
d. Tanks used for potable systems must be accessible for cleaning.
e. Tanks should be protected for direct sunlight if possible.
f. Tank are required to have an overflow design, and the overflow discharge should not enter septic system drain fields and should be routed so that it does not affect the foundation of the tanks or any other structures.

g. Tanks should be placed on a stable, level pad.
h. Wood tanks for potable water use must be lined with a food-grade liner.
i. Under ground tanks within 5' of the foundation of a building or structure require an engineered design to insure the stability of that building or structure.
j. If supplied with supplemental water from a potable water source, the connection must be made through an air gap and must be inspected as part of the permit for the extension of the potable water line.

H204.3.6.1 Tank size. When used to supply plumbing fixtures, the tank shall be a minimum of twice the volume of water required to meet the daily requirements of the fixtures supplied, but not less than 50 gallons (189 L).

Informational: When a plumbing fixture is operated, such as flushing a water closet or operating a washing machine, it is important to have the necessary quantity of water in the tank to meet the demand. Otherwise, the tank may empty faster than the supplemental line can refill.

H204.3.6.2 Makeup water. When rainwater is used to supply plumbing fixtures, potable water or approved well water from a dependable supply, shall be provided as a source of makeup water to the tank. Such connection to the tank shall be made with an air gap. Further, an adequate internal cross-connection control program is required to be demonstrated to the Water Department.

H204.3.7 Treatment. Filter systems installed after the pump may be necessary to reduce the number and size of particles that are distributed in the system.

Recommended Practice:

For non-potable systems used for hose irrigation, leaf screens on gutters and a roof washer is usually sufficient. If drip irrigation is planned, extra sediment filtration beyond the leaf screens, first-flush diverter and roof washer may be necessary to prevent clogging of emitters.

Disinfecting non-potable rainwater for indoor use is desirable to control microbial growth which could cause fouling and affect the operation of plumbing fixtures. A 5 micron filter may be sufficient. Disinfection can be accomplished by passing the water through ultraviolet light or by treating it with chlorine.

Informational: For non-potable rainwater for indoor use, household bleach (6% sodium hypochlorite) may be applied to the cistern at the rate of 2 fluid ounces per 1,000 gallons of water to achieve disinfection.

For potable water systems, treatment beyond the leaf screen, first-flush diverter and roof washer is necessary to remove sediment and disease-causing pathogens.

Recommended Practice: If using non-potable water inside a building, e.g. toilets, urinals, clothes washing, filtering to remove small particles that might clog valves and equipment should be considered.

Treatment generally consists of filtration and disinfection processes in series before distribution.

Treatment options include:

a. Cartridge Filters and Ultraviolet (UV) Light
Two in-line sediment filters – the 5 micron fiber cartridge filter followed by the 3-micron activated charcoal cartridge filter – followed by ultraviolet light.

b. Ozone
Chemically, ozone is O_3: essentially a more reactive form of molecular oxygen made up of three atoms of oxygen. An ozone generator forces ozone into storage tanks through rings or a diffuser stone. Ozone is unstable and reacts quickly to revert to O_2 and dissipates through the atmosphere.

c. Membrane Filtration (Reverse Osmosis and Nanofiltration)
Membrane filtration, such as reverse osmosis and nanofiltration work by forcing water under high pressure through a semipermeable membrane to filter dissolved solids and salts, both of which are in very low concentrations in rainwater.

d. Chlorination
A chlorine pump injects chlorine in to the water as it enters the building. A practical chlorine contact time, which is critical to kill bacteria, is usually from 2 minutes to 5 minutes with a free chlorine residual of 2 parts per million (ppm).

H205 Special Design Criteria

H205.1 Material. Unless it can be shown by the designer that the acidic property of rainwater is to be reduced, the use of copper pipe or tubing shall be limited as follows:

a. No prohibitions apply for a gravity flow (rain barrel) irrigation system.
b. No prohibitions apply to the irrigation system after the pump. Copper shall not be used from the tank to the pump.
c. When any part of the system enters a building or structure, copper shall not be used from the tank to any discharge point, except that those lines dedicated for irrigation only may use copper.

Informational: Rainwater is very soft and somewhat acidic, so it tends to be more corrosive than most other sources of drinking water. Due to the corrosive tendencies of rainwater, you should NOT use copper pipe or tubing, even if it is ANSI/NSF certified, because of its potential to develop pinhole leaks.

H205.2 Material Identification. If rainwater is used in a building or structure, the pipe from the tank to the discharge point shall be labeled for non-potable uses. The pipe should be labeled in black lettering "RAINWATER – DO NOT DRINK" on a bright orange background. The label should be marked at two-foot intervals throughout the length of the pipe. Every toilet, urinal, hose bib, or other fixture that uses rainwater should be permanently identified at the point of connection as non-potable rainwater by the above labeling.

Identification may be by any method noted in Division III of this appendix. For private residences, identification of fixtures may be accomplished with the installation of a permanent tag attached to the fixture cut-off valve.

If collected rain water is combined with another source of recovered water, the most restrictive provisions for use and identification shall apply.

H206 Protection of the Roof. In order to prevent water back up and accumulation on the roof, no screen, diverter, washer, filter or any other method subject to blockage shall be installed as listed below:

a. No system shall block a roof scupper.
b. No item shall be installed in the system that could back up water to the roof unless some form of overflow relief is installed such that the water is discharged before accumulation on the roof.

Informational: Roof drainage must occur. Any system that prevents the water from leaving the roof can create maintenance issues, such as leakage, or can overload the roof leading to collapse.

H207 Inspection and Testing. Rainwater water piping shall be tested as outlined in this code for testing of potable water piping. Associated back-flow devices, as required by this code and the Water Department, shall be tested as required for potable water systems.

H208 Maintenance. The system must be maintained or appropriately abandoned in an approved manner as provided for in Section H209.

Informational: The system owner should take into consideration the maintenance required to keep the system functioning as designed. Any failure to maintain the system can lead to damage to the tank, pump, piping, irrigation and plumbing equipment. Such damage should be expected to generate associated costs of repair.

H209 Abandonment. When a rainwater system is to be abandoned, all re-piping necessary to supply the irrigation and/or plumbing system with another water source will require applicable permits along with a set of plans to be approved by the Building Official.

Supplemental Information

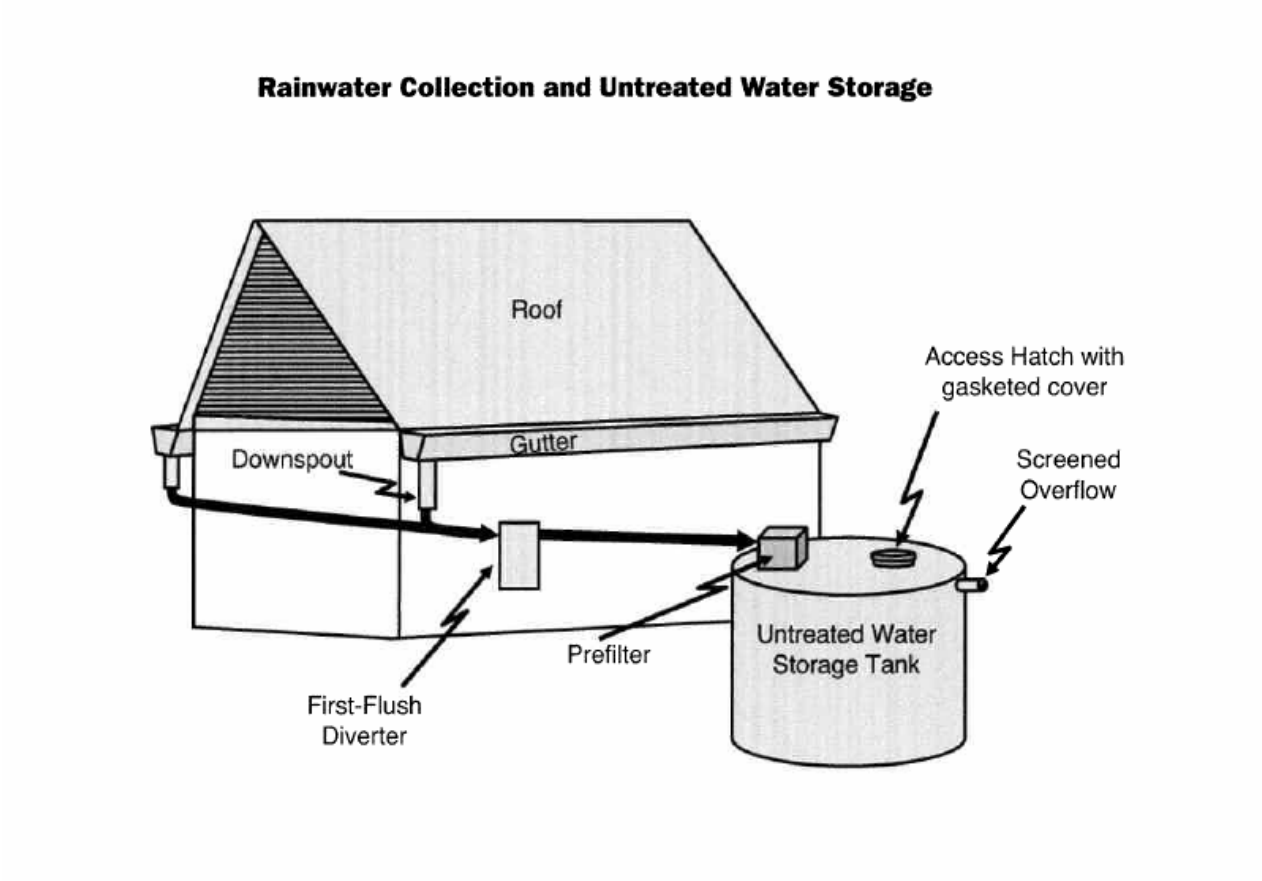

First-Flush Diverters

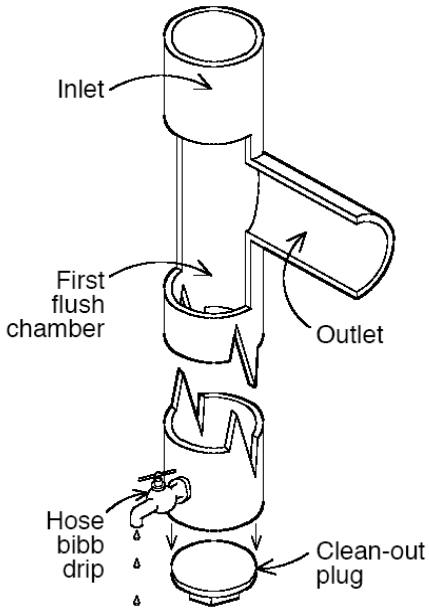

Figure 2-2. Standpipe first-flush diverter

Standpipe

The simplest first-flush diverter is a 6- or 8-inch PVC standpipe (Figure 2-2). The diverter fills with water first, backs up, and then allows water to flow into the main collection piping. These standpipes usually have a cleanout fitting at the bottom, and must be emptied and cleaned out after each rainfall event. The water from the standpipe may be routed to a planted area. A pinhole drilled at the bottom of the pipe or a hose bibb fixture left slightly open (shown) allows water to gradually leak out.

If you are using 3” diameter PVC or similar pipe, allow 33” length of pipe per gallon; 4” diameter pipe needs only 18” of length per gallon; and a little over 8” of 6” diameter pipe is needed to catch a gallon of water.

Standpipe with ball valve

The standpipe with ball valve is a variation of the standpipe filter. The cutaway drawing (Figure 2-3) shows the ball valve. As the chamber fills, the ball floats up and seals on the seat, trapping first-flush water and routing the balance of the water to the tank.

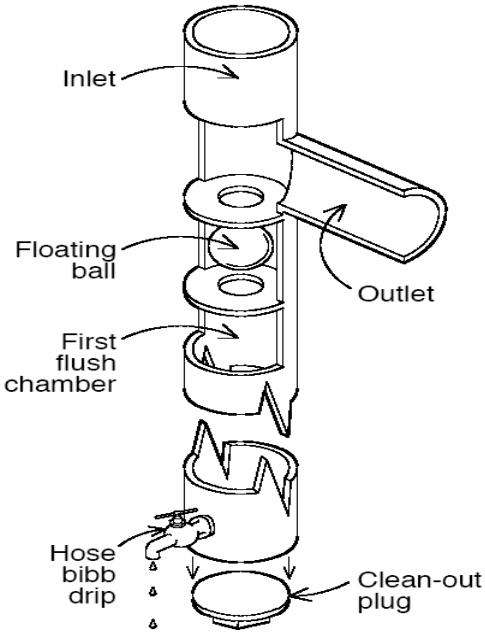

Figure 2-3. Standpipe with ball valve

Roof Washers

The roof washer, placed just ahead of the
storage tank, filters small debris for potable systems and also for systems using drip irrigation. Roof washers consist of a tank, usually between 30- and 50-gallon capacity, with leaf strainers and a filter (Figure 2-4). One commercially available roof washer has a 30-micron filter. (A micron, also called a micrometer, is one-millionth of a meter. A 30-micron filter has pores about one-third the diameter of a human hair.)

All roof washers must be cleaned. Without proper maintenance they not only become clogged and restrict the flow of rainwater, but may themselves become breeding grounds for pathogens.

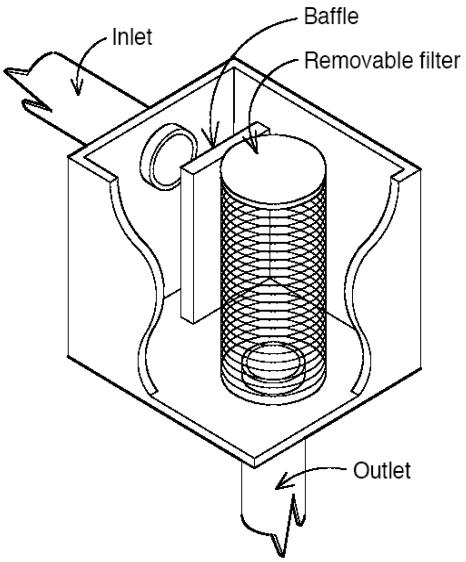

The box roof washer (Figure 2-4) is a commercially available component consisting of a fiberglass box with one or two 30-micron canister filters (handling rainwater from 1,500- and 3,500-square-foot catchments, respectively). The box is placed atop a ladder-like stand beside the tank, from which the system owner accesses the box for cleaning via the ladder. In locations with limited drop, a filter with the canisters oriented horizontally is indicated, with the inlet and outlet of the filter being nearly parallel.

Cistern Types

MATERIAL	FEATURES	CAUTION
Plastics		
Trash cans (20-50 gallon)	commercially available; inexpensive	use only new cans
Fiberglass	commercially available; alterable and moveable	must be sited on smooth, solid, level footing
Polyethylene/polypropylene	commercially available; alterable and moveable	UV-degradable, must be painted or tinted
Metals		
Steel drums (55-gallon)	commercially available; alterable and moveable	verify prior to use for toxics; prone to corrosion an rust;
Galvanized steel tanks	commercially available; alterable and moveable	possibly corrosion and rust; must be lined for potable use
Concrete and Masonry		
Ferrocement	durable and immoveable	potential to crack and fail
Stone, concrete block	durable and immoveable	difficult to maintain
Monolithic/Poured-in-place	durable and immoveable	potential to crack
Wood		
Redwood, fir, cypress	attractive, durable, can be disassembled and moved	expensive

Adapted from *Texas Guide to Rainwater Harvesting, Second Edition*, Texas Water Development Board, 1997.

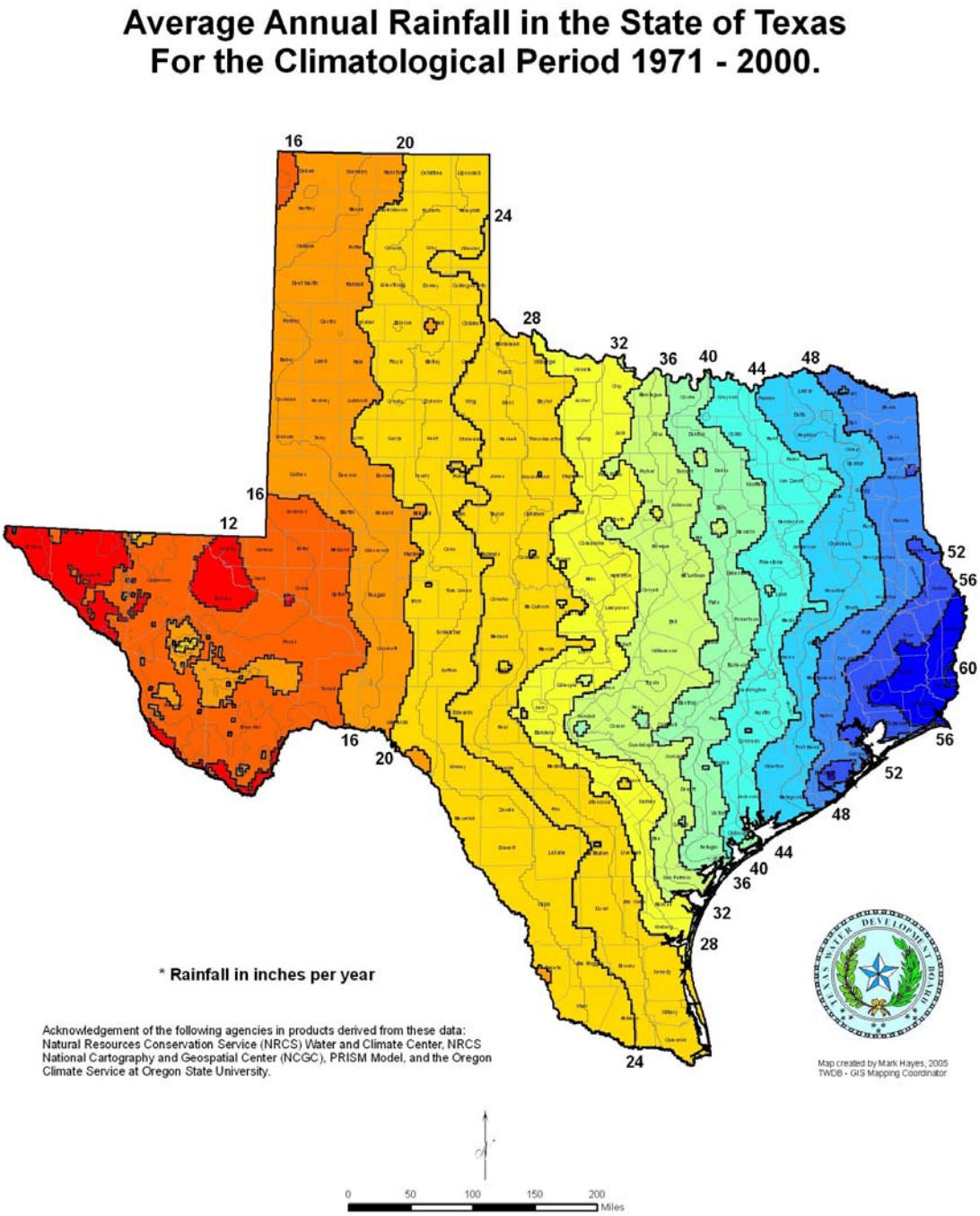

Figure 1. Average annual rainfall in Texas (in inches).

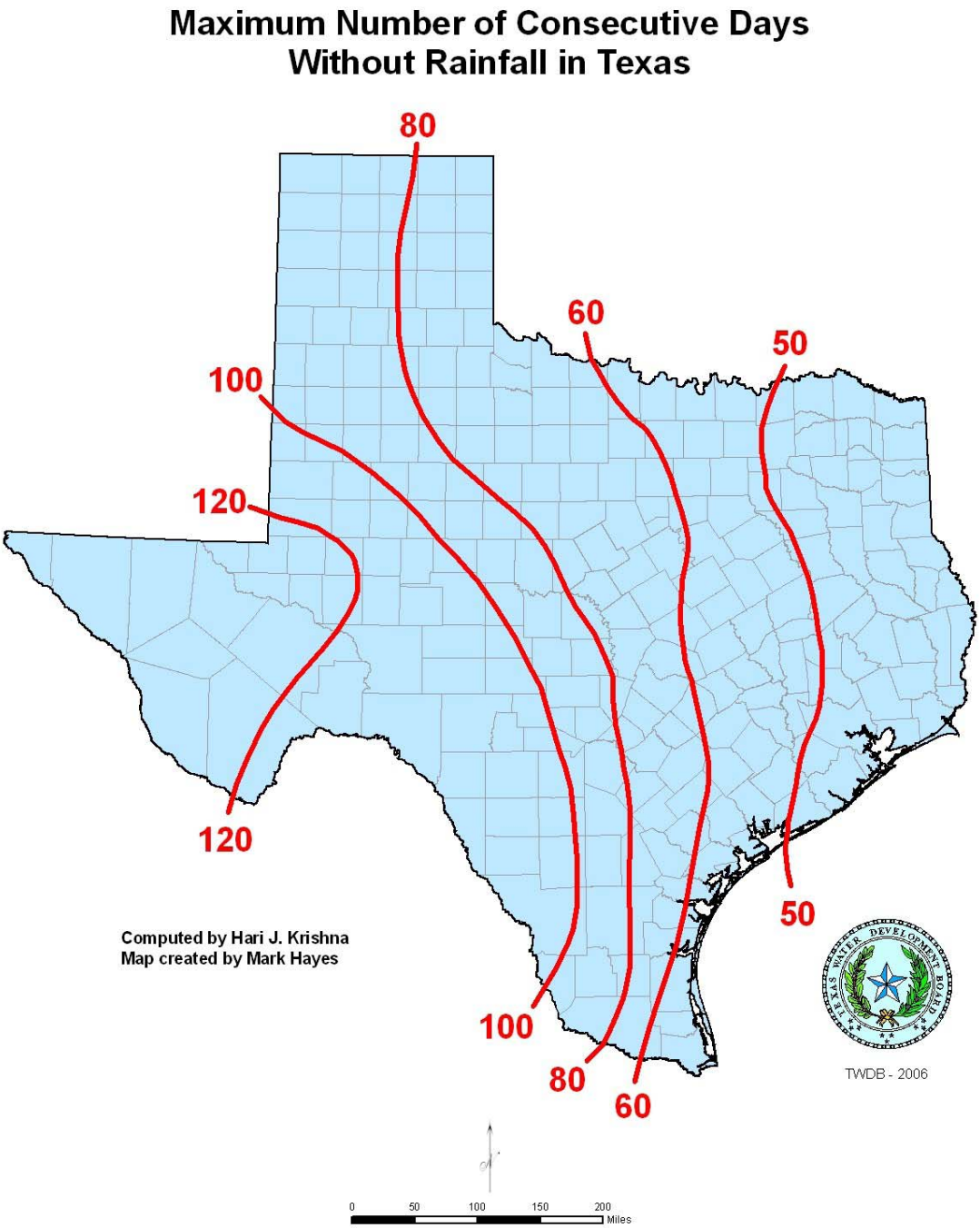

Figure 2. A map of Texas with isolines showing the maximum number of consecutive days without rainfall (Krishna, 2003; TWDB, 2005).

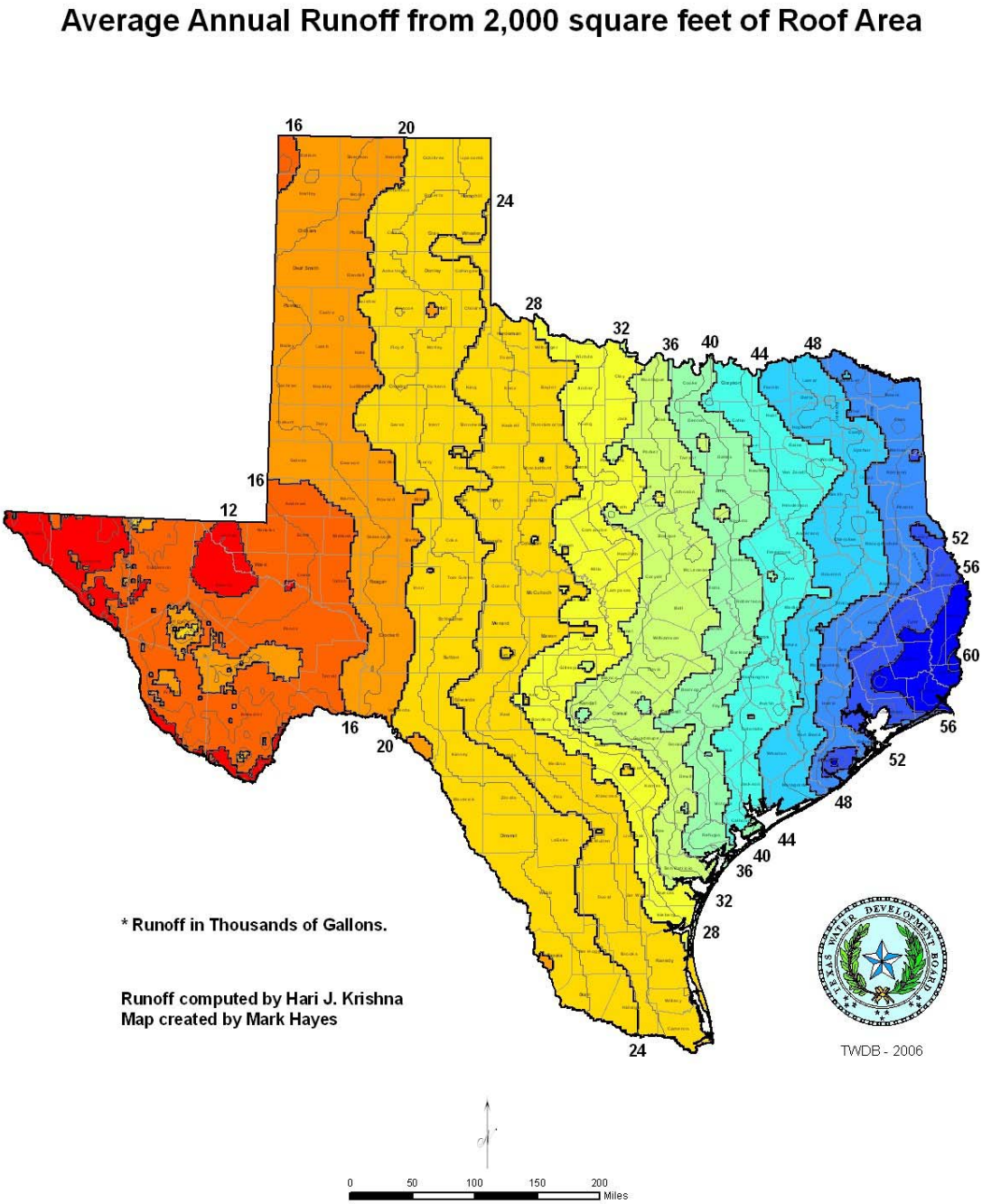

Figure 3. Map of Texas showing isolines of average annual runoff (in thousands of gallons) that can be expected from 2,000 square feet of roof area.

Division III – Domestic or Municipal Reclaimed Water Systems

H301 Scope. The provisions of this Division shall apply to the installation, construction, alteration, repair and maintenance of Domestic or Municipal Reclaimed Water Systems. Provisions listed herein that are identified as "Recommended Practice" or "Informational" in italic text shall not be mandatory. If Domestic or Municipal Reclaimed Water is combined with another water recovery source or domestic water, the most restrictive provisions shall apply.

This division shall apply to Domestic or Municipal Reclaimed Water Systems as follows:

1. After the point of delivery to private property from the local municipal water provider;
2. After the point of delivery to private property from another producer, licensed to do so in accordance with State Law.

Exceptions: 1. When the reclaimed water is being used at the site of the treatment plant (the producer), a point of delivery shall be determined at which point the public system becomes the private plumbing for use on the property. The then designated private plumbing shall comply with this division.

2. Any piping, joints and equipment used for irrigation systems that occur after the pump shall be subject to any applicable provisions in the Water Department Irrigation regulations. An irrigation and/or backflow permit may be required by the Water Department.

H301.1 Access to Reclaimed Water. Allowable access to the City of Fort Worth reclaimed water utility system shall only be with the approval of the Director of the Water Department.

H302 Definitions. All definitions listed in this section are intended to be in agreement with the Water Department regulations and the State of Texas laws. Any definition not listed shall be as defined in this code, other city codes or State Law.

BENEFICIAL USE – An economic use of wastewater in accordance with the purposes, applicable requirements, and quality criteria of this division and State Law, and which takes the place of potable and/or raw water that could otherwise be needed from another source. The use of reclaimed water in a quantity either less than or the economically optimal amount may be considered a beneficial use as long as it does not constitute a nuisance.

IRRIGATION USE means an approved use of reclaimed water for landscape, horticultural, or agricultural irrigation as defined by Title 30 Texas Administrative Code, Chapter 210.

MUNICIPAL WASTEWATER means waste or wastewater discharged into a publicly owned or a privately owned sewerage treatment works primarily consisting of domestic waste.

NUISANCE – Any distribution, storage, or use of reclaimed water, in such concentration and of such duration that is or may tend to be injurious to or which adversely affects human health or welfare, animal life, vegetation, or property, or which interferes with the normal use and

enjoyment of animal life, vegetation, or property.

RECLAIMED WATER is domestic, ~~or~~ municipal or industrial wastewater which has been treated to a quality suitable for beneficial use. Such water is either collected in a quality, or has been treated to a quality, that meets or exceeds Title 30 Texas Administrative Code, Chapter 210 requirements.

TYPE I RECLAIMED WATER USE means use of reclaimed water where contact between humans and the reclaimed water is likely.

TYPE II RECLAIMED WATER USE means use of reclaimed water where contact between humans and the reclaimed water is unlikely.

H303 Permits required. No special permit(s) is required by this department for a reclaimed water system beyond the permits already required by this code and other city codes. Examples, but not an all inclusive list, of possible permits are as follows:

a. Reclaim water system that conveys water to an above ground tank, such as a rain barrel, for gravity flow (hose flow) irrigation distribution:
    1. no permits are required. However, the following provisions are mandatory:
        i. mosquito protection
        ii. the tank (the barrel) must be in compliance with the tank provisions listed herein to prevent algae growth, provide overflow protection, etc.

b. Reclaim water system that conveys water to an above or below ground tank for pressurized distribution, such as through a pump:

    Permits are required for:
    1. the pump and its electrical service;
    2. all piping, joints and equipment after the pump when the system enters a building or structure. The entire system starting from the delivery point is subject to compliance and inspection;
    3. other than the pump, as listed above, no permits are required by this department when the system is for irrigation only and does not enter a building or structure. However, an irrigation and/or backflow permit may be required by the Water Department. The following provisions are mandatory:
        i. mosquito protection
        ii. the tank must be in compliance with the tank provisions listed herein to prevent algae growth, provide overflow protection, etc.

c. Reclaimed water systems in which the reclaimed water is combined with another water recovery source or domestic water:
    1. the most restrictive permit requirements shall be applicable, and the entire system starting from the delivery point is subject to compliance and inspection.

d. Any piping, joints and equipment used for irrigation systems that occur after the pump shall be subject to any applicable provisions in the Water Department Irrigation regulations.

When a permit is required through this department, even if just for the pump, plans and diagrams must be submitted showing compliance with the provisions of this appendix.

Exception: Plans need not be provided to this department for any portion of the irrigation piping that occurs after the pump.

H304 System Limitations/Restrictions.

H304.1 Quality of Reclaimed Water. Reclaimed water obtained from a source approved by the State of Texas shall be assumed to meet the quality as specified in the State written approval. Reclaimed Water shall not leave the site at which it is obtained except when approved as a producer or provider through appropriate State approval process.

H304.2 Type I Reclaimed Water Use. The provisions of this division are designed only for the non-potable use of Type I reclaimed water. Any system intended for use with Type II reclaimed water must be separately approved by the Building Official.

H304.3 Allowable Occupancies. Reclaimed Water Systems are not permitted in Residential Occupancies. In mixed-use occupancies, Reclaimed Water Systems may only be used in those areas that are non-residential (commercial and/or common area) in nature, when such areas are clearly separate and distinct from residential uses.

Exception: When permitted by the Director of the Water Department, Residential Occupancies may use Reclaimed Water for landscape irrigation.

H304.4 Connection to Potable Water Systems. The reclaimed water system shall have no connection to any potable water system, with or without mechanical backflow prevention devices. When the reclaimed water system tank is supplemented with a potable water source, such connection shall be made with an air gap. Exposed piping shall be resistant to damage from UV rays and must have adequate freeze protection.

Public water system customers that also have a reclaim water system must install a reduced pressure zone (RPZ) backflow preventer at the service meter.

H304.5 Permitted Fixtures. Reclaimed Water Systems may only be used as supply water to fixtures and/or appliances in which humans do not drink, consume, bath, wash food, dishes or wash their hands. Such allowable items include any of the following:

a. turf and general landscape irrigation;

b. non-food processing industrial processes;
c. construction activities;
d. vehicle washing;
e. chillers, boilers, cooling towers;
f. other non-human consumption uses authorized by the Director of the Water Department and approved by the Building Official.

Reclaimed water may not be used to fill swimming pools, hot tubs, wading pools, or other structures designed for contact recreation.

Informational: While irrigation systems are not covered by this division, the operator should be aware of the requirements under State Law. Some of the items listed in Texas Administrative Code (TAC), Title 30, Part 1, Chapter 210, Rule 210.24 and 210.56 are as follows:

General irrigation requirements.

a. The irrigation application rates and application times shall be developed so as to minimize "wet grass" conditions in unrestricted landscaped areas during the periods the area could be in use.
b. Irrigation systems shall be designed so that the irrigation spray does not reach any privately-owned premises outside the designated irrigation area or reach public drinking fountains.
c. There shall be no application of effluent when the ground is water saturated or frozen.
d. Distribution systems must be designed to prevent operation by unauthorized personnel.
e. Irrigation operations shall be managed in a manner to minimize the inadvertent contact of reclaimed water with humans.
f. Operations or tailwater controls shall be provided to preclude discharge of reclaimed water from irrigation sites.
g. When using industrial reclaimed water, the system shall be designed and managed to prevent contamination of groundwater or surface water and to prevent the occurrence of nuisance conditions. Tail water control facilities shall be provided, where necessary, to prevent the discharge of any industrial reclaimed water from irrigated lands into or adjacent to water in the state.
h. No industrial reclaimed water may be land applied when the ground is frozen or saturated or during rainfall events.
i. When applying industrial reclaimed water to land, a buffer area must be maintained around water wells to prevent the possibility of waste transport to groundwater via the well or well casing. Industrial reclaimed water shall not be applied within 250 feet of a private water well (used for domestic or irrigation use) or 500 feet of a public water supply well.

H304.6 Storage Tanks. Storage tanks, their foundation and their installation method must be capable of holding the imposed weight. Also, the water and its clarity may be affected by exposure to sunlight and the tank material, lining, or any paint that might be used.

Tank water is subject to algae growth and mosquito breeding. Algae can affect the clarity and odor of the water. Mosquito breeding is a health hazard.

Therefore, the following provisions are required.

a. Storage tanks must be opaque, either upon purchase or painted later, to inhibit algae growth.
b. Tanks must be covered and vents screened to discourage mosquito breeding.
c. Tanks should be protected for direct sunlight if possible.
d. Tanks are required to have an overflow design, and the overflow discharge shall be to an approved disposal method.
e. Tanks should be placed on a stable, level pad.
f. Under ground tanks within 5' of the foundation of a building or structure require an engineered design to insure the stability of that building or structure.
g. If supplied with supplemental water from a potable water source, the connection must be made through an air gap and must be inspected as part of the permit for the extension of the potable water line.

H304.6.1 Tank size. When used to supply plumbing fixtures, the tank shall be a minimum of twice the volume of water required to meet the daily requirements of the fixtures supplied, but not less than 50 gallons (189 L).

Informational: When a plumbing fixture is operated, such as flushing a water closet, it is important to have the necessary quantity of water in the tank to meet the demand. Otherwise, the tank may empty faster than the supplemental line can refill.

H304.6.2 Makeup water. When reclaimed water used to supply plumbing fixtures, potable water or approved well water from a dependable supply, shall be provided as a source of makeup water to the tank. Such connection to the tank shall be made with an air gap. Further, an adequate internal cross-connection control program is required to be demonstrated to the Water Department. .

H304.6.3 Overflow. When the supply of reclaimed water has the potential of exceeding the storage capacity in an uncontrolled delivery system, an approved alternate means of disposal shall be provided.

Informational: When the delivery system of a source of water, such as chilling towers or cooling evaporators, can provide more water than is used during periods of low demand, an approved means of disposal of the excess water must be designed in the system. An approved means of disposal may mean into the municipal wastewater system, if such disposal would have been allowed before the installation of a

reclaimed water system.

H304.7 Holding Ponds. Using holding ponds as water storage must be in accordance with State Law and requires separate approval by the Building Official.

H304.8 Treatment. Filter systems installed after the pump may be necessary to remove sediment and disease-causing pathogens and to reduce the number and size of particles that are distributed in the system.

Recommended Practice:

Disinfecting reclaimed water for indoor use is desirable to control microbial growth which could cause fouling and affect the operation of plumbing fixtures. A 5 micron filter may be sufficient. Disinfection can be accomplished by passing the water through ultraviolet light or by treating it with chlorine.

If using non-potable water inside a building, e.g. toilets and urinals, filtering to remove small particles that might clog valves and equipment should be considered.

If using reclaimed water for irrigation, filtering to remove small particles that might clog valves and equipment should be considered.

Treatment generally consists of filtration and disinfection processes in series before distribution.

Treatment options include:

a. Cartridge Filters and Ultraviolet (UV) Light
   Two in-line sediment filters – the 5 micron fiber cartridge filter followed by the 3-micron activated charcoal cartridge filter – followed by ultraviolet light.

b. Ozone
   Chemically, ozone is O_3: essentially a more reactive form of molecular oxygen made up of three atoms of oxygen. An ozone generator forces ozone into storage tanks through rings or a diffuser stone. Ozone is unstable and reacts quickly to revert to O_2 and dissipates through the atmosphere.

c. Membrane Filtration (Reverse Osmosis and Nanofiltration)
   Membrane filtration, such as reverse osmosis and nanofiltration work by forcing water under high pressure through a semipermeable membrane to filter dissolved solids and salts.

d. Chlorination
   A chlorine pump injects chlorine in to the water as it enters the building. A practical

chlorine contact time, which is critical to kill bacteria, is usually from 2 minutes to 5 minutes with a free chlorine residual of 2 parts per million (ppm).

H305 Special Design Criteria

H305.1 Material Identification. Reclaimed water piping and fittings shall be as required in this code for potable water piping and fittings. All reclaimed water pipe and fittings, hose bibs and faucets shall be purple in color as follows:

1. **Piping** and **fittings** shall be manufactured with purple color integral to the plastic, painted purple or wrapped with purple tape. Piping shall be marked on opposite sides to read "CAUTION: RECLAIMED WATER, DO NOT DRINK" in intervals not to exceed three (3) feet (914 mm), or

   may be continuously wrapped with purple-colored Mylar tape. The wrapping tape shall have a minimum nominal thickness of five ten-thousandths (0.0005) inch (0.127 mm) and a minimum width of two (2) inches (51 mm). Tape shall be fabricated of poly(vinyl chloride) with synthetic rubber adhesive and a clear polypropylene protective coating or approved equal.

   The tape shall be purple (Pantone color #512) and shall be imprinted in nominal one-half (½) inch (12.7 mm) high, black uppercase letters, with the words "CAUTION: RECLAIMED WATER, DO NOT DRINK." The lettering shall be imprinted in two (2) parallel lines, such that after wrapping the pipe with a one-half (½) width overlap, one (1) full line of text shall be visible.

2. All **hose bibs** and **faucets** shall be painted purple or manufactured with an integrated purple color and designed to prevent connection to a standard water hose. Such design may include a different size outlet such that standard water hoses cannot be attached.
3. All **valves** except fixture supply control valves shall be painted purple or manufactured with an integrated purple color and be equipped with a locking feature.
4. All **mechanical equipment** which is appurtenant to the reclaimed water system shall be painted purple or manufactured with an integrated purple color to match the Mylar wrapping tape.
5. All purple paint shall be of an approved type designated for this type of use and installed in accordance with the manufacturer's installation instructions.

H305.2 Installation.

1. Hose bibs shall be located in locked, below grade vaults which shall be clearly labeled as being of non-potable quality. As an alternative to the use of locked, below grade vaults with standard hose bibs services, hose bibs may be placed in a non-lockable service box which can only be operated by a special tool so long as the hose bib is clearly labeled as non-potable water, in accordance with subsection H305.3.

2. Reclaimed water pipes shall not be run or laid in the same trench as potable water pipes. A ten (10) foot (3048 mm) horizontal separation shall be maintained between pressurized, buried reclaimed and potable water piping. Buried potable water pipes crossing pressurized reclaimed water pipes shall be laid a minimum of twelve (12) inches (305 mm) above the reclaimed water pipes.
3. Reclaimed water pipes laid in the same trench or crossing building sewer or drainage piping shall be installed in compliance with Sections 603.2 of this code. Reclaimed water pipes shall be protected similar to potable water pipes.

H305.3 Signs.

1. **Restroom Entrance Signs.** All installations using reclaimed water for water closets and/or urinals shall be identified with signs. Each sign shall contain one-half (½) inch (12.7 mm) letters of a highly visible color on a contrasting background. The location of the sign(s) shall be such that the sign(s) shall be visible to all users entering the restroom. The number and location of the signs shall be approved by the Authority Having Jurisdiction and shall contain the following text:

TO CONSERVE WATER, THIS BUILDING USES RECLAIMED WATER TO FLUSH TOILETS AND URINALS.

2. **Equipment Room Signs.** Each equipment room containing reclaimed water equipment shall have a sign posted with the following wording in one (1) inch (25.4 mm) letters on a purple background:

CAUTION
RECLAIMED WATER, DO NOT DRINK.
DO NOT CONNECT TO DRINKING WATER SYSTEM.

NOTICE
CONTACT BUILDING MANAGEMENT BEFORE
PERFORMING ANY WORK ON THIS WATER SYSTEM.
.

This sign shall be posted in a location that is visible to anyone working on or near reclaimed water equipment.

3. **Valve Access Door Signs.** Each reclaimed water valve within a wall shall have its access door into the wall equipped with a warning sign approximately six (6) inches by six (6) inches (152 mm x 152 mm) with wording in one half (½) inch (12.7 mm) letters on a purple background. The size, shape, and format of the sign shall be substantially the same as that specified in subsection 2 above. The signs shall be attached inside the access door frame and shall hang in the center of the access door frame. This sign requirement shall be applicable to any and all access doors, hatches, etc., leading to reclaimed water piping and appurtenances.

4. **Valve Seals.** Each valve or appurtenance shall be sealed in a manner approved by the Authority Having Jurisdiction after the reclaimed system has been approved and placed into operation. These seals shall either be a crimped lead wire seal or a plastic breakaway seal which, if broken after system approval, shall be deemed conclusive evidence that the reclaimed water system has been accessed. The seals shall be purple with the words “RECLAIMED WATER” and shall be supplied by the reclaimed water purveyor or by other arrangements acceptable to the Authority Having Jurisdiction.

5. **Storage Areas and hose bibs.** Signs having a minimum size of eight inches by eight inches, as shown in Figure 1, shall be posted at all storage areas and on all hose bibs reading, in both English and Spanish, “Reclaimed Water, Do Not Drink” or similar wording. The area shall be secured to prevent access by the public.

FIGURE 1: 30 TAC §210.25(b)(1)

DO NOT DRINK THE WATER

NO TOMAR EL AGUA

H306 Inspection and Testing. Reclaimed water piping shall be tested as outlined in this code for testing of potable water piping. Associated back-flow devices, as required by this code and the Water Department, shall be tested as required for potable water systems.

H307 Maintenance. The system must be maintained or appropriately abandoned in an approved manner as provided for in Section H308.

Informational: The system owner should take into consideration the maintenance required to keep the system functioning as designed. Any failure to maintain the system can lead to damage to the tank, pump, piping, irrigation and plumbing equipment. Such damage should

be expected to generate associated costs of repair.

H308 Abandonment. When a reclaimed water system is to be abandoned, all re-piping necessary to supply the irrigation and/or plumbing system with another water source will require applicable permits along with a set of plans to be approved by the Building Official.

Division IV – Gray Water

H401 Scope. The provisions of this Division shall apply to the installation, construction, alteration, repair and maintenance of Gray Water Systems. Provisions listed herein that are identified as "Recommended Practice" or "Informational" in italic text shall not be mandatory. If Gray Water is combined with another water recovery source or domestic water, the most restrictive provisions shall apply.

This division shall apply to the entire Gray Water system.

> **Exception:** Any piping, joints and equipment used for irrigation systems that occur after the pump shall be subject to any applicable provisions in the Water Department Irrigation regulations. An irrigation and/or backflow permit may be required by the Water Department.

H402 Definitions. All definitions listed in this section are intended to be in agreement with the State of Texas laws. Any definition not listed shall be as defined in this code, other city codes or State Law.

GRAY WATER – Wastewater from:

a. showers;
b. bathtubs;
c. hand washing lavatories;
d. sinks that are not used for disposal of hazardous or toxic ingredients;
e. sinks not used for food preparation or disposal; and,
f. clothes-washing machines.

Gray water does not include wastewater from the washing of material, including diapers, soiled with human excreta or wastewater that has come into contact with toilet waste.

NUISANCE – Any distribution, storage, or use of gray water, in such concentration and of such duration that is or may tend to be injurious to or which adversely affects human health or welfare, animal life, vegetation, or property, or which interferes with the normal use and enjoyment of animal life, vegetation, or property.

H403 Permits required. No special permit(s) is required by this department for a gray water system beyond the permits already required by this code and other city codes.

Any piping, joints and equipment used for irrigation systems that occur after the pump shall be subject to any applicable provisions in the Water Department Irrigation regulations. An irrigation and/or backflow permit may be required by the Water Department.

When a permit is required through this department, even if just for the pump, plans and diagrams must be submitted showing compliance with the provisions of this appendix.

Exception: Plans need not be provided to this department for any portion of the irrigation piping that occurs after the pump.

H404 System Limitations/Restrictions.

H404.1 Connection to Potable Water Systems. The gray water system shall have no connection to any potable water system, with or without mechanical backflow prevention devices. When the gray water system tank is supplemented with a potable water source, such connection shall be made with an air gap. Exposed piping shall be resistant to damage from UV rays and must have adequate freeze protection.

Where possible, the intake pipe shall extend into the tank to avoid venting through the intake pipe. The internal termination point of this intake pipe shall be higher than the overflow drain.

Public water system customers that also have a gray water system must install a reduced pressure zone (RPZ) backflow preventer at the service meter.

H404.2 Permitted Fixtures. Gray Water Systems may only be used as supply water to fixtures and/or appliances in which humans do not drink, consume, bath, wash food, dishes or wash their hands. Such allowable items include any of the following:

a. toilet and urinal flushing;
b. turf and general landscape irrigation.

Gray water may not be used to fill swimming pools, hot tubs, wading pools, or other structures designed for contact recreation. Gray water shall not be used for hose bibs and faucets.

Informational: While irrigation systems are not covered by this division, the operator should be aware of the requirements under State Law listed in Texas Administrative Code (TAC), Title 30, Part 1, Chapter 210, Rule 210.83, 210.84 and 210.85 and the following recommended practices.

Recommended Practice:

a. The irrigation application rates and application times shall be developed so as to minimize "wet grass" conditions in unrestricted landscaped areas during the periods the area could be in use.
b. Irrigation systems shall be designed so that the irrigation spray does not reach any privately-owned premises outside the designated irrigation area or reach public drinking fountains.
c. There shall be no application of effluent when the ground is water saturated or frozen.

d. Irrigation operations shall be managed in a manner to minimize the inadvertent contact of gray water with humans.
e. Operations or tailwater controls shall be provided to preclude discharge of gray water from irrigation sites.
f. When using gray water, the system shall be designed and managed to prevent contamination of groundwater or surface water and to prevent the occurrence of nuisance conditions. Tail water control facilities shall be provided, where necessary, to prevent the discharge of any gray water from irrigated lands into or adjacent to water in the state.
g. Gray water systems should maintain the following separations:

Element	*Minimum Horizontal Distance*	
	Holding Tank (feet)	*Irrigation Disposal Field (feet)*
Buildings	*5*	*2*
Property line adjoining private property	*5*	*5*
Public water main	*10*	*10*
Seepage pits	*5*	*5*
Septic tanks	*0*	*5*
Streams and lakes	*50*	*50*
Water service	*5*	*5*
Water wells	*50*	*100*

H404.3 Storage Tanks. Storage tanks, their foundation and their installation method must be capable of holding the imposed weight. Also, the water and its clarity may be affected by exposure to sunlight and the tank material, lining, or any paint that might be used.

Tank water is subject to algae growth and mosquito breeding. Algae can affect the clarity and odor of the water. Mosquito breeding is a health hazard.

Therefore, the following provisions are required.

a. Storage tanks must be opaque, either upon purchase or painted later, to inhibit algae growth.
b. Tanks must be covered and vents screened to discourage mosquito breeding.
c. Tanks should be protected for direct sunlight if possible.
d. Tanks are required to have an overflow design, and the overflow discharge shall be to an approved disposal method.
e. Tanks should be placed on a stable, level pad.
f. Under ground tanks within 5’ of the foundation of a building or structure require an engineered design to insure the stability of that building or structure.

g. If supplied with supplemental water from a potable water source, the connection must be made through an air gap and must be inspected as part of the permit for the extension of the potable water line.

Where possible, the intake pipe shall extend into the tank to avoid venting through the intake pipe. The internal termination point of this intake pipe shall be higher than the overflow drain.

H404.3.1 Tank size. When used to supply plumbing fixtures, the tank shall be a minimum of twice the volume of water required to meet the daily requirements of the fixtures supplied, but not less than 50 gallons (189 L).

Informational: When a plumbing fixture is operated, such as flushing a water closet, it is important to have the necessary quantity of water in the tank to meet the demand. Otherwise, the tank may empty faster than the supplemental line can refill.

The tank should be sized to limit the retention time of gray water to a maximum of 72 hours. Longer storage time increases the potential of microbial growth and odors.

H404.3.2 Makeup water. When gray water is used to supply plumbing fixtures, potable water or approved well water from a dependable supply, shall be provided as a source of makeup water to the tank. Such connection to the tank shall be made with an air gap. Further, an adequate internal cross-connection control program is required to be demonstrated to the Water Department. .

H404.3.3 Overflow. When the supply of gray water has the potential of exceeding the storage capacity in an uncontrolled delivery system, an approved alternate means of disposal shall be provided. For a system that receives gray water only, the tank shall be equipped with an overflow pipe having the same or larger diameter as the influent pipe for the gray water. The overflow pipe shall be indirectly connected to the sanitary drainage system. If the tank is supplied with water recovered from another source, the most restrictive overflow provision shall apply.

Informational: An approved means of disposal may mean into the municipal wastewater system, if such disposal would have been allowed before the installation of a gray water system.

H404.3.4 Drain. For a system that receives gray water only, a drain shall be located at the lowest point of the tank and shall be indirectly connected to the sanitary drainage system. The drain shall be the same diameter as the overflow pipe required in Section H404.3.3. If the tank is supplied with water recovered from another source, the most restrictive drain provision shall apply.

H404.3.5 Vent required. The reservoir shall be provided with a vent sized in accordance

with the vent provisions of this code based on the diameter of the reservoir influent pipe.

H404.4 Treatment.

H404.4.1 Filtration entering the tank. Gray water entering the tank shall pass through an approved filter such as a media, sand or diatomaceous earth filter.

A full-open valve shall be installed downstream of the last fixture connection to the gray water discharge pipe before entering the required filter.

H404.4.2 Disinfection. Gray water used for flushing water closets and urinals shall be disinfected by an approved method that employs one or more disinfectants such as chlorine, iodine or ozone as listed in Section H404.4.3.

H404.4.3 Filter systems installed after the pump may be necessary to remove sediment and disease-causing pathogens and to reduce the number and size of particles that are distributed in the system.

Recommended Practice:

Disinfecting gray water for indoor use is required to control microbial growth which could cause fouling and affect the operation of plumbing fixtures. A 5 micron filter may be sufficient. Disinfection can be accomplished by passing the water through ultraviolet light or by treating it with chlorine.

If using gray water for irrigation, filtering to remove small particles that might clog valves and equipment should be considered.

Treatment generally consists of filtration and disinfection processes in series before distribution.

Treatment options include:

a. Cartridge Filters and Ultraviolet (UV) Light
   Two in-line sediment filters – the 5 micron fiber cartridge filter followed by the 3-micron activated charcoal cartridge filter – followed by ultraviolet light.

b. Ozone
   Chemically, ozone is O_3: essentially a more reactive form of molecular oxygen made up of three atoms of oxygen. An ozone generator forces ozone into storage tanks through rings or a diffuser stone. Ozone is unstable and reacts quickly to revert to O_2 and dissipates through the atmosphere.

c. Membrane Filtration (Reverse Osmosis and Nanofiltration)
   Membrane filtration, such as reverse osmosis and nanofiltration work by forcing water under high pressure through a semipermeable membrane to filter dissolved solids and

salts.

d. Chlorination
A chlorine pump injects chlorine in to the water as it enters the building. A practical chlorine contact time, which is critical to kill bacteria, is usually from 2 minutes to 5 minutes with a free chlorine residual of 2 parts per million (ppm).

H404.4.4 Coloring. When used for flushing water closets and urinals, the gray water shall be dyed blue or green with a food grade vegetable dye before such water is supplied to the fixtures.

H405 Special Design Criteria

H405.1 Material Identification. Gray water piping and fittings shall be as required in this code for potable water piping and fittings. All gray water pipe and fittings shall be purple in color as follows:

a. **Piping** and **fittings** shall be manufactured with purple color integral to the plastic, painted purple or wrapped with purple tape. Piping shall be marked on opposite sides to read "CAUTION: GRAY WATER, DO NOT DRINK" in intervals not to exceed three (3) feet (914 mm), or

   may be continuously wrapped with purple-colored Mylar tape. The wrapping tape shall have a minimum nominal thickness of five ten-thousandths (0.0005) inch (0.127 mm) and a minimum width of two (2) inches (51 mm). Tape shall be fabricated of poly(vinyl chloride) with synthetic rubber adhesive and a clear polypropylene protective coating or approved equal.

   The tape shall be purple (Pantone color #512) and shall be imprinted in nominal one-half (½) inch (12.7 mm) high, black uppercase letters, with the words "CAUTION: GRAY WATER, DO NOT DRINK." The lettering shall be imprinted in two (2) parallel lines, such that after wrapping the pipe with a one-half (½) width overlap, one (1) full line of text shall be visible.

b. All **valves** except fixture supply control valves shall be painted purple and be equipped with a locking feature.
c. All **mechanical equipment** which is appurtenant to the gray water system shall be painted purple to match the Mylar wrapping tape.
d. All purple paint shall be of an approved type designated for this type of use and installed in accordance with the manufacturer's installation instructions.

H405.2 Installation.

a. Gray water pipes shall not be run or laid in the same trench as potable water pipes. A ten (10) foot (3048 mm) horizontal separation shall be maintained between pressurized, buried reclaimed and potable water piping. Buried potable water pipes crossing pressurized reclaimed water pipes shall be laid a minimum of twelve (12) inches (305 mm) above the reclaimed water pipes.
b. Gray water pipes laid in the same trench or crossing building sewer or drainage piping shall be installed in compliance with Sections 603.2 of this code. Gray water pipes shall be protected similar to potable water pipes.

H405.3 Signs.

1. **Restroom Entrance Signs.** All installations using gray water for water closets and/or urinals shall be identified with signs. Each sign shall contain one-half (½) inch (12.7 mm) letters of a highly visible color on a contrasting background. The location of the sign(s) shall be such that the sign(s) shall be visible to all users entering the restroom. The number and location of the signs shall be approved by the Authority Having Jurisdiction and shall contain the following text:

TO CONSERVE WATER, THIS BUILDING USES GRAY WATER TO FLUSH TOILETS AND URINALS.

Exception: For private residences, identification of fixtures may be accomplished with the installation of a permanent tag attached to the fixture cut-off valve.

2. **Valve Seals.** Each valve or appurtenance shall be sealed in a manner approved by the Authority Having Jurisdiction after the gray system has been approved and placed into operation. These seals shall either be a crimped lead wire seal or a plastic breakaway seal which, if broken after system approval, shall be deemed conclusive evidence that the reclaimed water system has been accessed. The seals shall be purple with the words "GRAY WATER" and shall be supplied by installer or by other arrangements acceptable to the Building Official.

FIGURE 1: 30 TAC §210.25(b)(1)

DO NOT DRINK THE WATER

NO TOMAR EL AGUA

H406 Inspection and Testing. Gray water piping shall be tested as outlined in this code for testing of potable water piping. Associated back-flow devices, as required by this code and the Water Department, shall be tested as required for potable water systems.

H407 Maintenance. The system must be maintained or appropriately abandoned in an approved manner as provided for in Section H408.

Informational: The system owner should take into consideration the maintenance required to keep the system functioning as designed. Any failure to maintain the system can lead to damage to the tank, pump, piping, irrigation and plumbing equipment. Such damage should

be expected to generate associated costs of repair.

H408 Abandonment. When a gray water system is to be abandoned, all re-piping necessary to supply the irrigation and/or plumbing system with another water source will require applicable permits along with a set of plans to be approved by the Building Official.

Supplemental Information

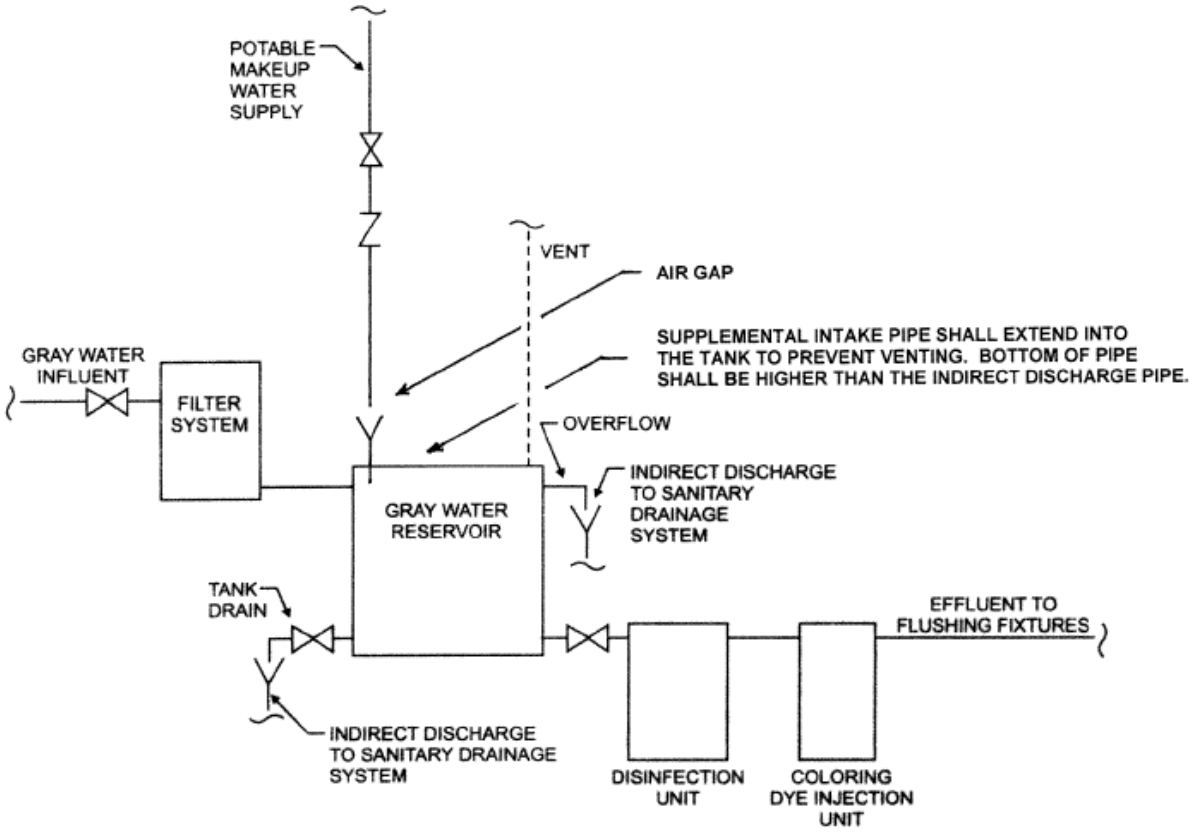

FIGURE AO101.1(1)
GRAY WATER RECYCLING SYSTEM FOR FLUSHING WATER CLOSETS AND URINALS

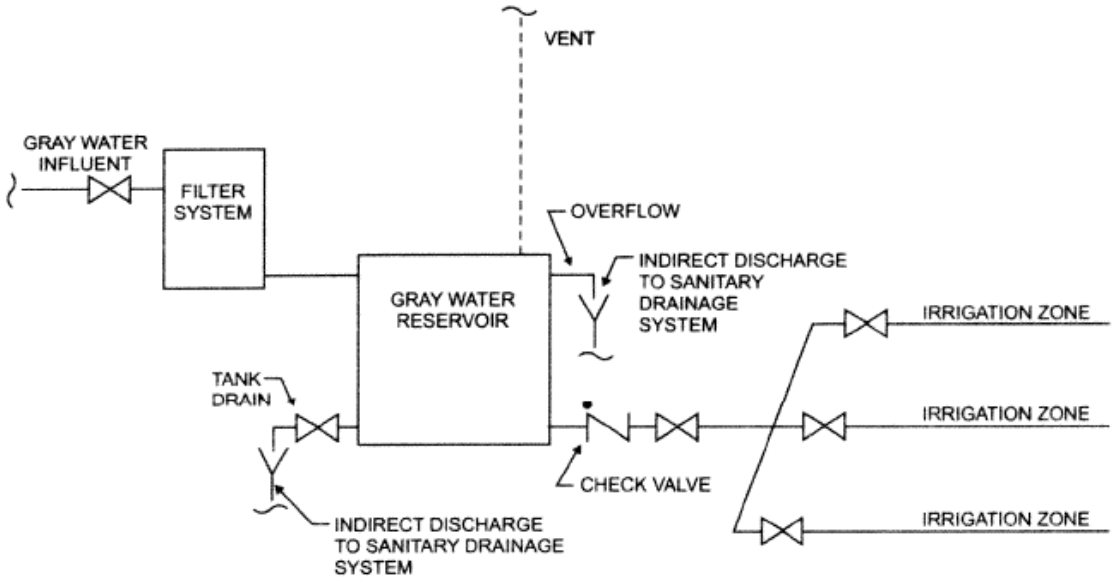

FIGURE AO101.1(2)
GRAY WATER RECYCLING SYSTEM FOR SUBSURFACE LANDSCAPE IRRIGATION

Division V – Industrial Reclaimed Water Systems

H501 Scope. The provisions of this Division shall apply to the installation, construction, alteration, repair and maintenance of Industrial Reclaimed Water Systems. Industrial Reclaim Water is when reclaimed water comes from on-site sources or equipment, such as cooling towers or evaporators. See Section H504.4 for more detail. This type of water is only allowed to be used within the boundaries of the industrial facility or within the boundaries of property that is contiguous to the facility and owned or operated by the producer.

Provisions listed herein that are identified as "Recommended Practice" or "Informational" in italic text shall not be mandatory. If industrial reclaimed water is combined with another water recovery source or domestic water, the most restrictive provisions shall apply.

1. This division shall apply to the entire Industrial Reclaimed Water System.

   Exception: Any piping, joints and equipment used for irrigation systems that occur after the pump shall be subject to any applicable provisions in the Water Department Irrigation regulations. An irrigation and/or backflow permit may be required by the Water Department.

H502 Definitions. All definitions listed in this section are intended to be in agreement with the Water Department regulations and the State of Texas laws. Any definition not listed shall be as defined in this code, other city codes or State Law.

BENEFICIAL USE – An economic use of wastewater in accordance with the purposes, applicable requirements, and quality criteria of this division and State Law, and which takes the place of potable and/or raw water that could otherwise be needed from another source. The use of reclaimed water in a quantity either less than or the economically optimal amount may be considered a beneficial use as long as it does not constitute a nuisance.

BLOWDOWN – The discharge of recirculating water for the purpose of discharging materials contained in the water, the further buildup of which would cause concentration in amounts that could damage or impair machinery, equipment, or systems.

INDUSTRIAL USE means an approved use of reclaimed water for industrial or commercial processes as defined by 30 Texas Administrative Code, Chapter 210.

INDUSTRIAL RECLAIMED WATER. Means any industrial wastewater that is non-domestic or non-municipal which has been treated, if necessary, to a quality suitable for land application or for beneficial use. See Sections H504.1 and H504.4.

IRRIGATION USE means an approved use of reclaimed water for landscape, horticultural, or agricultural irrigation as defined by Title 30 Texas Administrative Code, Chapter 210.

MUNICIPAL WASTEWATER means waste or wastewater discharged into a publicly owned or a privately owned sewerage treatment works primarily consisting of domestic waste.

NON-CONTACT COOLING WATER – Water used for cooling which does not come into direct contact with any raw material, intermediate product, waste product, by-product, or finished product.

NUISANCE – Any distribution, storage, or use of reclaimed water, in such concentration and of such duration that is or may tend to be injurious to or which adversely affects human health or welfare, animal life, vegetation, or property, or which interferes with the normal use and enjoyment of animal life, vegetation, or property.

ONCE-THROUGH COOLING WATER – Water passed through main cooling condensers in one or two passes for the purpose of removing waste heat.

On-SITE INDUSTRIAL RECLAIMED WATER shall mean the use of industrial reclaimed water within the boundaries of the industrial facility or within the boundaries of property that is contiguous to the facility and owned or operated by the producer.

RECLAIMED WATER is domestic, ~~or~~ municipal or industrial wastewater which has been treated to a quality suitable for beneficial use. Such water is either collected in a quality, or has been treated to a quality, that meets or exceeds Title 30 Texas Administrative Code, Chapter 210 requirements.

TYPE I RECLAIMED WATER USE means use of reclaimed water where contact between humans and the reclaimed water is likely.

TYPE II RECLAIMED WATER USE means use of reclaimed water where contact between humans and the reclaimed water is unlikely.

H503 Permits required. No special permit(s) is required by this department for an industrial reclaimed water system beyond the permits already required by this code and other city codes. Examples, but not an all inclusive list, of possible permits are as follows:

a. Industrial reclaimed water system that conveys water to an above ground tank, such as a rain barrel, for gravity flow (hose flow) irrigation distribution:
    1. no permits are required. However, the following provisions are mandatory:
        i. mosquito protection
        iii. the tank (the barrel) must be in compliance with the tank provisions listed herein to prevent algae growth, provide overflow protection, etc.

b. Industrial reclaimed water system that conveys water to an above or below ground tank for pressurized distribution, such as through a pump:

    Permits are required for:
    1. the pump and its electrical service;

2. all piping, joints and equipment after the pump when the system enters a building or structure. The entire system starting from the delivery point is subject to compliance and inspection;
3. other than the pump, as listed above, no permits are required by this department when the system is for irrigation only and does not enter a building or structure. However, an irrigation and/or backflow permit may be required by the Water Department. The following provisions are mandatory:
    i. mosquito protection
    ii. the tank must be in compliance with the tank provisions listed herein to prevent algae growth, provide overflow protection, etc.

c. Industrial reclaimed water systems in which the industrial reclaimed water is combined with another water recovery source or domestic water:
    1. the most restrictive permit requirements shall be applicable, and the entire system starting from the delivery point is subject to compliance and inspection.

d. Any piping, joints and equipment used for irrigation systems that occur after the pump shall be subject to any applicable provisions in the Water Department Irrigation regulations.

When a permit is required through this department, even if just for the pump, plans and diagrams must be submitted showing compliance with the provisions of this appendix.

Exception: Plans need not be provided to this department for any portion of the irrigation piping that occurs after the pump. Plans must be submitted to the Water Department for any portion of the irrigation piping that occurs after the pump and approval from the TCEQ in compliance with 30 TAC 210 is required.

H504 System Limitations/Restrictions.

H504.1 Quality of Industrial Reclaimed Water. Industrial reclaimed water obtained from a source approved by the State of Texas shall be assumed to meet the quality as specified in the State written approval.

When industrial reclaimed water is obtained from an internal on-site source to be used on-site, a water quality report, stamped by an engineer licensed to practice in the State of Texas, qualified in water purification systems, will be required. The report shall contain the following:

1. a description of the purification and filtering system to be employed for the source supply piping and the storage tank;
2. the chemicals, bacteria, virus, etc. that the treatment is designed to control. At a minimum, the treatment shall be for Fecal Coliform, Legionela pneumophila and

Salmonella typhi;

3. the maximum quantity levels expected to not exceed;
4. a description of the chemicals used in equipment cleaning and/or service (such as the cooling tower maintenance), any expected hazards associated with the quantities used, the methods, if any, to prevent the chemical from reaching the end use in an unacceptable level of concentration;
5. a schedule of continual on-site testing to occur at the storage tank and the discharge fixture, identifying when the purification system may need maintenance and/or replacement.

Industrial reclaimed water shall not leave the site at which it is obtained except when approved as a producer or provider through appropriate State approval process.

H504.2 Allowable Occupancies. Industrial reclaimed water systems are not permitted in Residential Occupancies. In mixed-use occupancies, industrial reclaimed water systems may only be used in those areas that are non-residential (commercial and/or common area) in nature, when such areas are clearly separate and distinct from residential uses.

> **Exception**: When permitted by the Director of the Water Department, Residential Occupancies may use industrial reclaimed water for landscape irrigation.

H504.3 Connection to Potable Water Systems. The industrial reclaimed water system shall have no connection to any potable water system, with or without mechanical backflow prevention devices. When the industrial reclaimed water system tank is supplemented with a potable water source, such connection shall be made with an air gap. Exposed piping shall be resistant to damage from UV rays and must have adequate freeze protection.

Public water system customers that also have a reclaim water system must install a reduced pressure zone (RPZ) backflow preventer at the service meter.

H504.4 Industrial Reclaimed Water. On-site collection of water from the following sources shall be permitted as Industrial Reclaimed Water:

i. Air conditioner condensate; compressor condensate; steam condensate; or condensate that forms externally on steam lines and is not process wastewater;
ii. non-contact cooling water;
iii. once through cooling water;
iv. water treatment filter backwash;
v. water from routine external washing of buildings, conducted without the use of detergents or other chemicals;
vi. cooling tower blowdown with a total dissolved solids concentration less than 2,000 milligrams per liter.

Such water may have an end use which includes one or more of the following and is on-site:

1. landscape irrigation;
2. toilet or urinals.

For the purpose of this subsection, **On-site** shall mean "The use of industrial reclaimed water within the boundaries of the industrial facility or within the boundaries of property that is contiguous to the facility and owned or operated by the producer."

Informational: While irrigation systems are not covered by this division, the operator should be aware of the requirements under State Law. Some of the items listed in Texas Administrative Code (TAC), Title 30, Part 1, Chapter 210, Rule 210.24 and 210.56 are as follows:

General irrigation requirements.

a. The irrigation application rates and application times shall be developed so as to minimize "wet grass" conditions in unrestricted landscaped areas during the periods the area could be in use.
b. Irrigation systems shall be designed so that the irrigation spray does not reach any privately-owned premises outside the designated irrigation area or reach public drinking fountains.

b. There shall be no application of effluent when the ground is water saturated or frozen.
c. Distribution systems must be designed to prevent operation by unauthorized personnel.
d. Irrigation operations shall be managed in a manner to minimize the inadvertent contact of reclaimed water with humans.
e. Operations or tailwater controls shall be provided to preclude discharge of reclaimed water from irrigation sites.
f. When using industrial reclaimed water, the system shall be designed and managed to prevent contamination of groundwater or surface water and to prevent the occurrence of nuisance conditions. Tail water control facilities shall be provided, where necessary, to prevent the discharge of any industrial reclaimed water from irrigated lands into or adjacent to water in the state.
g. No industrial reclaimed water may be land applied when the ground is frozen or saturated or during rainfall events.
h. When applying industrial reclaimed water to land, a buffer area must be maintained around water wells to prevent the possibility of waste transport to groundwater via the well or well casing. Industrial reclaimed water shall not be applied within 250 feet of a private water well (used for domestic or irrigation use) or 500 feet of a public water supply well.

H504.5 Storage Tanks. Storage tanks, their foundation and their installation method must be capable of holding the imposed weight. Also, the water and its clarity may be affected by exposure to sunlight and the tank material, lining, or any paint that might be used.

Tank water is subject to algae growth and mosquito breeding. Algae can affect the clarity and odor of the water. Mosquito breeding is a health hazard.

Therefore, the following provisions are required.

a. Storage tanks must be opaque, either upon purchase or painted later, to inhibit algae growth.
b. Tanks must be covered and vents screened to discourage mosquito breeding.
c. Tanks should be protected for direct sunlight if possible.
d. Tanks are required to have an overflow design, and the overflow discharge shall be to an approved disposal method.
e. Tanks should be placed on a stable, level pad.
f. Under ground tanks within 5' of the foundation of a building or structure require an engineered design to insure the stability of that building or structure.
g. If supplied with supplemental water from a potable water source, the connection must be made through an air gap and must be inspected as part of the permit for the extension of the potable water line.

H504.5.1 Tank size. When used to supply plumbing fixtures, the tank shall be a minimum of twice the volume of water required to meet the daily requirements of the fixtures supplied, but not less than 50 gallons (189 L).

Informational: When a plumbing fixture is operated, such as flushing a water closet, it is important to have the necessary quantity of water in the tank to meet the demand. Otherwise, the tank may empty faster than the supplemental line can refill.

H504.5.2 Makeup water. When industrial reclaimed water used to supply plumbing fixtures, potable water or approved well water from a dependable supply, shall be provided as a source of makeup water to the tank. Such connection to the tank shall be made with an air gap. Further, an adequate internal cross-connection control program is required to be demonstrated to the Water Department. .

H504.5.3 Overflow. When the supply of industrial reclaimed water has the potential of exceeding the storage capacity in an uncontrolled delivery system, an approved alternate means of disposal shall be provided.

Informational: When the delivery system of a source of water, such as chilling towers or cooling evaporators, can provide more water than is used during periods of low demand, an approved means of disposal of the excess water must be designed in the system. An approved means of disposal may mean into the municipal wastewater system, if such disposal would have been allowed before the installation of a reclaimed water system.

H504.6 Holding Ponds. Using holding ponds as water storage must be in accordance with

State Law and requires separate approval by the Building Official.

H504.7 Treatment. Filter systems installed after the pump may be necessary to remove sediment and disease-causing pathogens and to reduce the number and size of particles that are distributed in the system.

Recommended Practice:

Disinfecting industrial reclaimed water for indoor use is desirable to control microbial growth which could cause fouling and affect the operation of plumbing fixtures. A 5 micron filter may be sufficient. Disinfection can be accomplished by passing the water through ultraviolet light or by treating it with chlorine.

If using non-potable water inside a building, e.g. toilets and urinals, filtering to remove small particles that might clog valves and equipment should be considered.

If using industrial reclaimed water for irrigation, filtering to remove small particles that might clog valves and equipment should be considered.

Treatment generally consists of filtration and disinfection processes in series before distribution.

Treatment options include:

a. Cartridge Filters and Ultraviolet (UV) Light
   Two in-line sediment filters – the 5 micron fiber cartridge filter followed by the 3-micron activated charcoal cartridge filter – followed by ultraviolet light.

b. Ozone
   Chemically, ozone is O_3: essentially a more reactive form of molecular oxygen made up of three atoms of oxygen. An ozone generator forces ozone into storage tanks through rings or a diffuser stone. Ozone is unstable and reacts quickly to revert to O_2 and dissipates through the atmosphere.

c. Membrane Filtration (Reverse Osmosis and Nanofiltration)
   Membrane filtration, such as reverse osmosis and nanofiltration work by forcing water under high pressure through a semipermeable membrane to filter dissolved solids and salts.

d. Chlorination
   A chlorine pump injects chlorine in to the water as it enters the building. A practical chlorine contact time, which is critical to kill bacteria, is usually from 2 minutes to 5 minutes with a free chlorine residual of 2 parts per million (ppm).

H505 Special Design Criteria

H505.1 Material Identification. Industrial reclaimed water piping and fittings shall be as required in this code for potable water piping and fittings. All industrial reclaimed water pipe and fittings, hose bibs and faucets shall be purple in color as follows:

1. **Piping** and **fittings** shall be manufactured with purple color integral to the plastic, painted purple or wrapped with purple tape. Piping shall be marked on opposite sides to read "CAUTION: RECLAIMED WATER, DO NOT DRINK" in intervals not to exceed three (3) feet (914 mm), or

   may be continuously wrapped with purple-colored Mylar tape. The wrapping tape shall have a minimum nominal thickness of five ten-thousandths (0.0005) inch (0.127 mm) and a minimum width of two (2) inches (51 mm). Tape shall be fabricated of poly(vinyl chloride) with synthetic rubber adhesive and a clear polypropylene protective coating or approved equal.

   The tape shall be purple (Pantone color #512) and shall be imprinted in nominal one-half (½) inch (12.7 mm) high, black uppercase letters, with the words "CAUTION: RECLAIMED WATER, DO NOT DRINK." The lettering shall be imprinted in two (2) parallel lines, such that after wrapping the pipe with a one-half (½) width overlap, one (1) full line of text shall be visible.

2. All **hose bibs** and **faucets** shall be painted purple or manufactured with an integrated purple color and designed to prevent connection to a standard water hose. Such design may include a different size outlet such that standard water hoses cannot be attached.
3. All **valves** except fixture supply control valves shall be painted purple or manufactured with an integrated purple color and be equipped with a locking feature.
4. All **mechanical equipment** which is appurtenant to the reclaimed water system shall be painted purple or manufactured with an integrated purple color to match the Mylar wrapping tape.
5. All purple paint shall be of an approved type designated for this type of use and installed in accordance with the manufacturer's installation instructions.

H505.2 Installation.

1. Hose bibs shall be located in locked, below grade vaults which shall be clearly labeled as being of non-potable quality. As an alternative to the use of locked, below grade vaults with standard hose bibs services, hose bibs may be placed in a non-lockable service box which can only be operated by a special tool so long as the hose bib is clearly labeled as non-potable water, in accordance with subsection H505.3.
2. Industrial reclaimed water pipes shall not be run or laid in the same trench as potable water pipes. A ten (10) foot (3048 mm) horizontal separation shall be maintained between pressurized, buried industrial reclaimed and potable water piping. Buried

potable water pipes crossing pressurized reclaimed water pipes shall be laid a minimum of twelve (12) inches (305 mm) above the reclaimed water pipes.

3. Industrial reclaimed water pipes laid in the same trench or crossing building sewer or drainage piping shall be installed in compliance with Sections 603.2 of this code. Industrial reclaimed water pipes shall be protected similar to potable water pipes.

H505.3 Signs.

1. **Restroom Entrance Signs.** All installations using industrial reclaimed water for water closets and/or urinals shall be identified with signs. Each sign shall contain one-half (½) inch (12.7 mm) letters of a highly visible color on a contrasting background. The location of the sign(s) shall be such that the sign(s) shall be visible to all users entering the restroom. The number and location of the signs shall be approved by the Authority Having Jurisdiction and shall contain the following text:

TO CONSERVE WATER, THIS BUILDING USES RECLAIMED WATER TO FLUSH TOILETS AND URINALS.

2. **Equipment Room Signs.** Each equipment room containing industrial reclaimed water equipment shall have a sign posted with the following wording in one (1) inch (25.4 mm) letters on a purple background:

CAUTION RECLAIMED WATER, DO NOT DRINK. DO NOT CONNECT TO DRINKING WATER SYSTEM. NOTICE CONTACT BUILDING MANAGEMENT BEFORE PERFORMING ANY WORK ON THIS WATER SYSTEM. .

This sign shall be posted in a location that is visible to anyone working on or near industrial reclaimed water equipment.

3. **Valve Access Door Signs.** Each industrial reclaimed water valve within a wall shall have its access door into the wall equipped with a warning sign approximately six (6) inches by six (6) inches (152 mm x 152 mm) with wording in one half (½) inch (12.7 mm) letters on a purple background. The size, shape, and format of the sign shall be substantially the same as that specified in subsection 2 above. The signs shall be attached inside the access door frame and shall hang in the center of the access door frame. This sign requirement shall be applicable to any and all access doors, hatches, etc., leading to industrial reclaimed water piping and appurtenances.

4. **Valve Seals.** Each valve or appurtenance shall be sealed in a manner approved by the Authority Having Jurisdiction after the industrial reclaimed system has been approved and placed into operation. These seals shall either be a crimped lead wire seal or a plastic breakaway seal which, if broken after system approval, shall be deemed conclusive evidence that the industrial reclaimed water system has been accessed. The seals shall be purple with the words "RECLAIMED WATER" and shall be supplied by the industrial reclaimed water purveyor or by other arrangements acceptable to the Authority Having Jurisdiction.

5. **Storage Areas and hose bibs.** Signs having a minimum size of eight inches by eight inches, as shown in Figure 1, shall be posted at all storage areas and on all hose bibs reading, in both English and Spanish, "Reclaimed Water, Do Not Drink" or similar wording. The area shall be secured to prevent access by the public.

FIGURE 1: 30 TAC §210.25(b)(1)

DO NOT DRINK THE WATER

NO TOMAR EL AGUA

H506 Inspection and Testing. Industrial reclaimed water piping shall be tested as outlined in this code for testing of potable water piping. Associated back-flow devices, as required by this code and the Water Department, shall be tested as required for potable water systems.

H507 Maintenance. The system must be maintained or appropriately abandoned in an approved manner as provided for in Section H508.

Informational: The system owner should take into consideration the maintenance required to keep the system functioning as designed. Any failure to maintain the system can lead to damage to the tank, pump, piping, irrigation and plumbing equipment. Such damage should

be expected to generate associated costs of repair.

H508 Abandonment. When an industrial reclaimed water system is to be abandoned, all re-piping necessary to supply the irrigation and/or plumbing system with another water source will require applicable permits along with a set of plans to be approved by the Building Official.

SECTION 3.

That Section 26-3 of the Code of the City of Fort Worth (1986), as amended, is hereby amended to read as follows:

Sec. 26-3. Effect of Conflict with Other Ordinances.

This chapter shall be cumulative of all provisions of ordinances of the Code of the City of Fort Worth, Texas (1986), affecting Plumbing Code provisions, as amended, and shall not repeal any of the provisions of such ordinances, except in those instances where provisions of such ordinances are in direct conflict with the provisions of this ordinance.

SECTION 4.

That Section 26-4 of the Code of the City of Fort Worth (1986), as amended, is hereby added to read as follows:

Sec. 26-4 Penalty for violation.

Any person, firm, or corporation violating any of the provisions of this ordinance shall be deemed guilty of a misdemeanor and upon conviction thereof shall be punishable by a fine not to exceed Two Thousand Dollars ($2,000.00) for all violations involving fire safety, or public health and sanitation and shall be fined not more than Five Hundred Dollars ($500.00) for all other violations of this ordinance. Each day or any portion thereof during which any violation of this ordinance occurs or continues shall be deemed a separate offense and upon conviction thereof shall be punishable as herein provided.

SECTION 5.

This chapter shall be cumulative of all provisions of ordinances of the Code of the City of Fort Worth, Texas (1986), affecting Plumbing Code provisions, as amended, and shall not repeal any of the provisions of such ordinances, except in those instances where provisions of such ordinances are in direct conflict with the provisions of this ordinance.

SECTION 6.

It is hereby declared to be the intention of the City Council that the sections, paragraphs, sentences, clauses, and phrases of this ordinance are severable, and, if any phrase, clause, sentence, paragraph, or section of this ordinance shall be declared void, ineffective, or unconstitutional by the valid judgment or decree of any court of competent jurisdiction, such voidness, ineffectiveness, or unconstitutionality shall not affect any of the remaining phrases, clauses, sentences, paragraphs, and sections of this ordinance, since the same would have been

enacted by the City Council without the incorporation in this ordinance of any such void, ineffective, or unconstitutional phrase, clause, sentence, paragraph, or section.

SECTION 7.

Any person, firm, or corporation violating any of the provisions of this ordinance shall be deemed guilty of a misdemeanor and upon conviction thereof shall be punishable by a fine not to exceed Two Thousand Dollars ($2,000.00) for all violations involving fire safety, or public health and sanitation and shall be fined not more than Five Hundred Dollars ($500.00) for all other violations of this ordinance. Each day or any portion thereof during which any violation of this ordinance occurs or continues shall be deemed a separate offense and upon conviction thereof shall be punishable as herein provided.

SECTION 8.

All rights and remedies of the City of Fort Worth, Texas are expressly saved as to any and all violations of the previous Plumbing Code, or any other ordinances affecting construction and fire safety, which have accrued at the time of the effective date of this ordinance: and, as to such accrued violations and all pending litigation, both civil and criminal, whether pending in court or not, under such ordinances, same shall not be affected by this ordinance but may be prosecuted until final disposition by the courts.

SECTION 9.

A copy of the 2009 International Plumbing Code and the 2009 International Fuel Gas Code, together with the local amendments contained in this ordinance, shall be filed in the office of the City Secretary for permanent record and inspection.

SECTION 10.

The Department of Planning and Development of the City of Fort Worth, Texas, is hereby authorized to publish this ordinance in pamphlet form for general distribution among the public, and the operative provisions of this ordinance as so published shall be admissible in evidence in all courts without further proof than the production thereof, as provided in Chapter XXV, Section 3, of the Charter of the City of Fort Worth, Texas.

SECTION 11.

The City Secretary of the City of Fort Worth, is hereby directed to publish the caption and Sections 1, 7, 9, 11 and 12 of this ordinance for two (2) days in the official newspaper of the City of Fort Worth, Texas as authorized by Section 2, Chapter XXV of the Charter of the City of Fort Worth, Texas and by Section 52.013 (a) of the Texas Local Government Code.

SECTION 12.

This ordinance shall take effect upon April 1, 2011.

APPROVED AS TO FORM AND LEGALITY:

By: _____
Assistant City Attorney

Adopted: ____March 22, 2011____

Effective: ____April 1, 2011_____

1-05-11